CrustBuster
SPEED KING INC.

4740 Drill

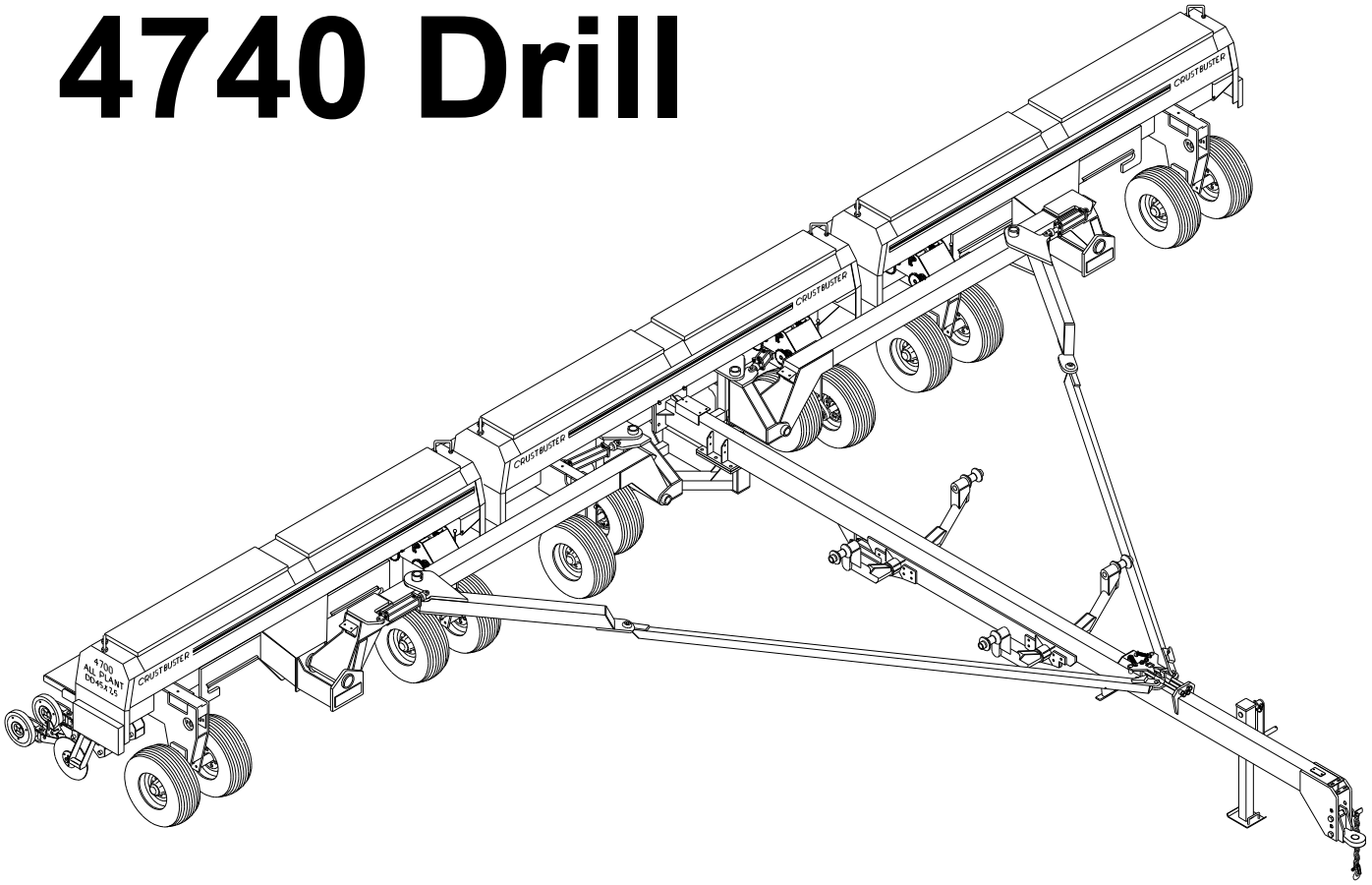

OWNER'S MANUAL

OPERATION • MAINTENANCE • REPAIR PARTS

(09-05) # 606483

Identification

Your CrustBuster® drill is identified by a Serial Number and Model Number. Record these numbers in the spaces provided in this manual and refer to them when ordering parts or requesting service.

Serial Number	Model Number

Warranty

WARRANTY: In addition to the implied warranties of fitness and of merchantability, CrustBuster®/Speed King, Inc. warrants new products sold by it to be free from defects in workmanship and material for a period of 12 months, from the date of delivery to the first user customer. Warranty on purchased parts (cylinder, blades, bearings, shanks, etc.) will be the same as that offered by the appropriate manufacturer of these parts.

EXCLUSIONS: No warranty of any kind is made by CrustBuster®/Speed King, Inc. with regard to new products which have been subject to operation in excess of recommended capacities, misuse, abuse, negligence, or accident, or have been altered or repaired in any manner not authorized by CrustBuster®/Speed King, Inc. CrustBuster®/Speed King, Inc. is constantly striving to improve its products. Changes in design and improvement will be made whenever CrustBuster®/Speed King, Inc. believes the efficiency of its products will be improved thereby, but without incurring any obligation to incorporate such improvements in any products which have been shipped or are in service. No obligation exists for compensation of unauthorized repairs or modifications without prior approval. And in no event will CrustBuster®/Speed King, Inc. be liable for consequential damages, such as but not limited to: downtime, delayed or late tillage or planting, etc.

WARRANTY REGISTRATION: This warranty is not valid unless registered with CrustBuster®/Speed King, Inc. within 10 days from the date of purchase. It is the sole responsibility of the selling retail dealer to fill out the registration forms and see that they are properly filed with CrustBuster®/Speed King, Inc.

WARRANTY PROCEDURE: Should any part fail to conform with this warranty, CrustBuster®/Speed King, Inc. will repair or replace the part or parts which do not conform. If a part is defective, take it to your authorized CrustBuster® Farm Equipment Dealer immediately, along with your warranty registration, and complete the proper forms requesting a warranty adjustment. Our representative will pick up the part to be returned to the factory for examination. If the customer (first user) requests that a new part be substituted for the old part, a new part will be charged to the dealer who will in turn charge the customer. If the part is found by us to be defective, a credit for the part will be given to the dealer to be passed on to the customer. If the dealer or customer wishes to repair the part, this will be done only if authorized by CrustBuster®/Speed King, Inc. This warranty procedure is in addition to all remedies authorized by law.

CRUSTBUSTER®/SPEED KING, INC.
Box 1438
Dodge City, KS 67801

Specifications are subject to change without notice. CrustBuster ® is a registered trademark of CrustBuster/Speed King, Inc.

Table of Contents

Identification and Warranty . . . . . Inside Front Cover
Specifications 1
Safety. 2-8
Transporting Drill 9
Folding and Unfolding Drill. 10
Field Operating Checklist. 10
Field Operation:
- Operating Speed. 11
- Adjustment Procedure 11
- Leveling Drill 11

All Plant Drill:
- Opener and Toolbar Adjustment. 11
- Setting Down Pressure 12
- Weighting 12
- Setting Seed Depth. 12-13
- Minimum Tillage Conditions 13
- Conventional Field Conditions 13
- No-Till Conditions 13

Min-Till Drill:
- Setting Down Pressure 14
- Down Pressure Spring 14
- Setting Seed Depth. 14
- Presswheel Adjustment and Tool Bar Rotation 15

Lubrication and Service. 16
Scraper Adjustment. 16
Blade Gap Adjustment 17
Tandem Wheel Drive Clutch 17
Calibration / Drilling Rates 18
Sprocket Box Operation. 18
Seed Cup Adjustments and Service 19
Sprocket Locations 20-21
Meter Man Acreage Counter 22
Sprocket Box Adjustment 22
Seed Rate Charts 23-30

Illustrations and Repair Parts:
- Center Drive 32-33
- Wing Drive. 34-37
- Gearbox. 38-41
- Clutch Lever Assembly 39, 41
- Center Frame Section 42
- Drive End Bracket & Bearing. 43
- Tandem Axle 43
- Drive Plate w/Hub 44
- 8 Bolt Hub 44
- Center Clutch Assembly 45
- Center Drive Sprocket. 45
- Throw-out Clutch Half 45
- Drive Clutch Sprocket 45
- Hitch 46
- 3-Point Hitch Option & Pin. 47
- Wing Carrier Adjustment. 47
- Wing Frame Sections 48
- Clutch Assembly 49
- Spindle & Hub Assembly. 49
- 6 Bolt Hub 49
- Meter Man Acre Counter 49
- Fold and Pull Bar. 50-52
- Grain Box 54-55
- Tool Bars. 56-57
- Cylinder Depth Control Lock 57
- All Plant Opener Assembly 58-59
- Min-Till Opener Assembly. 60-61
- All Plant Opener Blades 62
- Min-Till Opener Blades 63
- Presswheel Assemblies 64-67
- Feed Tubes. 68
- Hydraulics 69-73
- Markers 74-80
- Lighting System. 81
- Shaft & Bin Monitor 82
- Fertilizer. 83-98
- Troubleshooting. 99

Specifications

Size & Spacing	Number Openers	Weight w/ Min-till Openers	Weight w/ All Plant Openers	Min. HP
40' x 7½"	63	23,105 lbs.	24,050 lbs.	180
40' x 10"	46	21,222 lbs.	21,912 lbs.	180
40' x 15" **(Opener offset center)**	32	20,762 lbs.	21,242 lbs.	180
40' x 15"	31	20,686 lbs.	21,151 lbs.	180

BE A SAFE OPERATOR
BY THINKING BEFORE ACTING
AND
BY READING
YOUR OWNER'S MANUAL

Avoid Accidents

Most accidents, whether they occur in industry, on the farm, at home, or on the highway, are caused by the failure of some individual to follow simple and fundamental safety rules or precautions. For this reason most accidents can be prevented by recognizing the real cause and doing something about it before the accident occurs.

Regardless of the care used in the design and construction of any type of equipment, there are many conditions that cannot be completely safeguarded against without interfering with reasonable accessibility and efficient operation.

A CAREFUL OPERATOR
is the Best Insurance Against an Accident.
The complete observance of one simple rule
would prevent many thousands
of serious injuries each year.

That rule is:

Never Attempt to
Clean, Oil, or Adjust
A Machine While It Is In Motion.

To Our Customers

The following pages and illustrations are printed to help supply you with the knowledge to better operate and service your new CrustBuster equipment.

We are proud to have you as a customer and feel you will be proud to be a CrustBuster owner.

Any piece of equipment needs, and must have, a certain amount of service and maintenance to keep it in top running condition. We have attempted to cover all the adjustments required to fit most conditions; however, there may be times when special care must be taken to fit a condition.

Study this owner's manual carefully and become acquainted with all the adjustments and operating procedures before attempting to operate your new equipment. Remember, it is a machine and has been designed and tested to do an efficient job in most operating conditions and will perform in relation to the services it receives.

If special attention is required for some condition, ask your CrustBuster dealer; he will be glad to help and answer any questions on operations and service of your new machine.

TAKE TIME FOR SAFETY

Safety

RECOGNIZE SAFETY INFORMATION

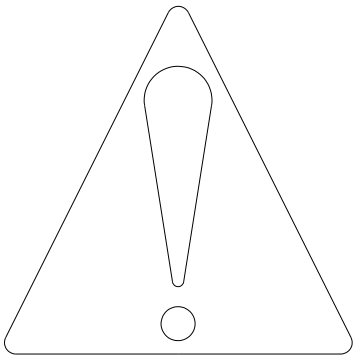

THIS IS THE SAFETY-ALERT SYMBOL. WHEN YOU SEE THIS SYMBOL ON YOUR MACHINE OR IN THIS MANUAL, BE ALERT TO THE POTENTIAL FOR PERSONAL INJURY.

FOLLOW RECOMMENDED PRECAUTIONS AND SAFE OPERATING PRACTICES.

UNDERSTAND SIGNAL WORDS

A SIGNAL WORD-DANGER, WARNING, OR CAUTION-IS USED WITH THE SAFETY-ALERT SYMBOL. DANGER IDENTIFIES THE MOST SERIOUS HAZARDS.

DANGER OR WARNING SAFETY SIGNS ARE LOCATED NEAR SPECIFIC HAZARDS. GENERAL PRECAUTIONS ARE LISTED ON CAUTION SAFETY SIGNS. CAUTION ALSO CALLS ATTENTION TO SAFETY MESSAGES IN THIS MANUAL.

DANGER

WARNING

CAUTION

FOLLOW SAFETY INSTRUCTIONS

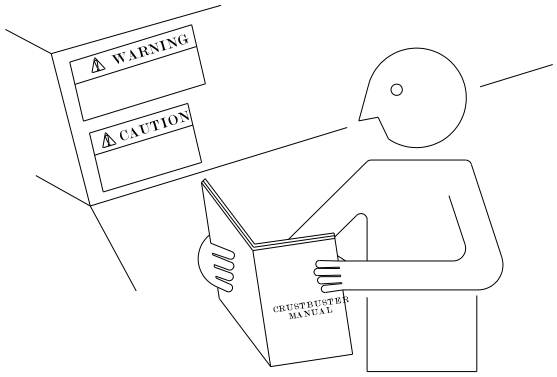

CAREFULLY READ ALL SAFETY MESSAGES IN THIS MANUAL AND ON YOUR MACHINE SAFETY SIGNS. KEEP SAFETY SIGNS IN GOOD CONDITION. REPLACE MISSING OR DAMAGED SAFETY SIGNS. BE SURE NEW EQUIPMENT COMPONENTS AND REPAIR PARTS INCLUDE THE CURRENT SAFETY SIGNS. REPLACEMENT SAFETY SIGNS ARE AVAILABLE FROM YOUR CRUSTBUSTER DEALER.

LEARN HOW TO OPERATE THE MACHINE AND HOW TO USE CONTROLS PROPERLY. DO NOT LET ANYONE OPERATE WITHOUT INSTRUCTION.

KEEP YOUR MACHINE IN PROPER WORKING CONDITION. UNAUTHORIZED MODIFICATIONS TO THE MACHINE MAY IMPAIR THE FUNCTION AND/OR SAFETY AND AFFECT MACHINE LIFE.

IF YOU DO NOT UNDERSTAND ANY PART OF THIS MANUAL AND NEED ASSISTANCE, CONTACT YOUR CRUSTBUSTER DEALER.

Safety

OPERATE SAFELY

DO NOT OPERATE DRILL WITH MORE THEN ONE PERSON ON THE TRACTOR.

DO NOT ALLOW ANYONE TO RIDE ON THE DRILL.

DO NOT OPERATE CLOSE TO A DITCH OR CREEK.

DRIVE SLOWLY OVER ROUGH GROUND.

SHIFT THE TRACTOR INTO A LOWER GEAR WHEN OPERATING ON STEEP SLOPES.

IF YOUR TRACTOR IS EQUIPPED WITH A ROLL-GUARD SAFETY CANOPY AND A SEAT BELT, BE SURE TO KEEP YOUR SEAT BELT FASTENED WHEN OPERATING OR TRANSPORTING THE DRILL.

HANDLE AND APPLY CHEMICALLY TREATED SEEDS ACCORDING TO MANUFACTURER'S RECOMMENDATIONS. PROPERLY DISPOSE OF UNUSED TREATED SEEDS AND THEIR CONTAINERS.

ALWAYS SHUT OFF TRACTOR ENGINE AND SHIFT TO PARK WHEN LEAVING TRACTOR. REMOVE KEY WHEN LEAVING TRACTOR UNATTENDED.

AVOID TIP-OVERS

USE A SEAT BELT UNDER ALMOST ALL OPERATING CONDITIONS.

AVOID HOLES, DITCHES, AND OBSTRUCTIONS WHICH MAY CAUSE THE MACHINE TO TIP, ESPECIALLY ON HILLSIDES.

NEVER DRIVE NEAR THE EDGE OF A GULLY OR STEEP EMBANKMENT-IT MIGHT CAVE IN.

SLOW DOWN FOR HILLSIDES, ROUGH GROUND, AND SHARP TURNS.

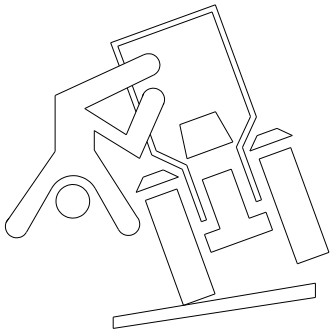

KEEP RIDERS OFF MACHINE

ONLY ALLOW THE OPERATOR ON THE MACHINE. KEEP RIDERS OFF.

RIDERS ON MACHINE ARE SUBJECT TO INJURY SUCH AS BEING STRUCK BY FOREIGN OBJECTS AND BEING THROWN OFF OF THE MACHINE. RIDERS ALSO OBSTRUCT THE OPERATOR'S VIEW RESULTING IN THE MACHINE BEING OPERATED IN AN UNSAFE MANNER.

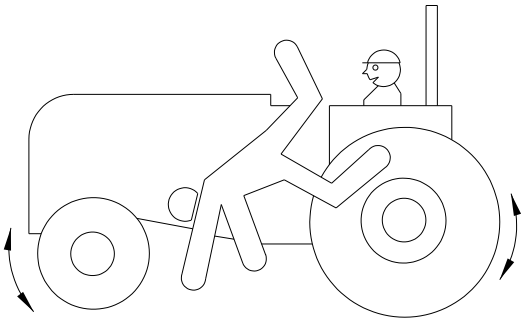

Safety

HANDLE FUEL SAFELY - AVOID FIRES

HANDLE FUEL WITH CARE: IT IS HIGHLY FLAMMABLE.

DO NOT REFUEL THE MACHINE WHILE SMOKING OR WHEN NEAR OPEN FLAME OR SPARKS.

ALWAYS STOP ENGINE BEFORE REFUELING MACHINE. FILL FUEL TANK OUTDOORS.

PREVENT FIRES BY KEEPING MACHINE CLEAN OF ACCUMULATED TRASH, GREASE, AND DEBRIS. ALWAYS CLEAN UP SPILLED FUEL.

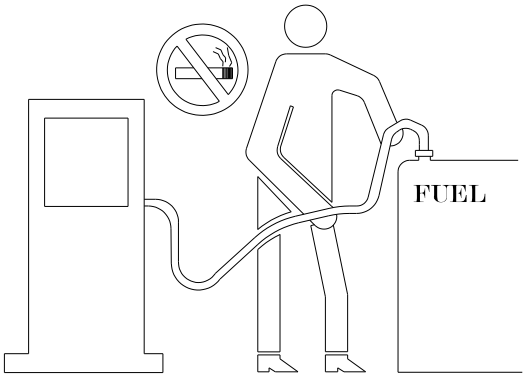

PREPARE FOR EMERGENCIES

BE PREPARED IF A FIRE STARTS.

KEEP A FIRST AID KIT AND FIRE EXTINGUISHER HANDY.

KEEP EMERGENCY NUMBERS FOR DOCTORS, AMBULANCE SERVICE, HOSPITAL, AND FIRE DEPARTMENT NEAR YOUR TELEPHONE.

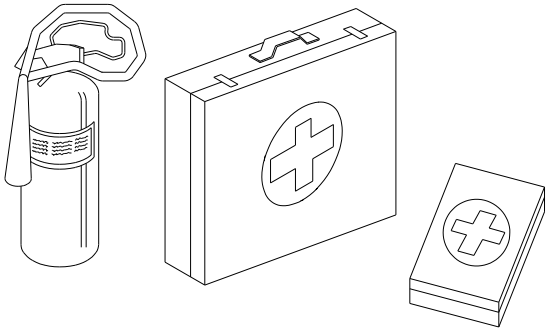

WEAR PROTECTIVE CLOTHING

WEAR CLOSE FITTING CLOTHING AND SAFETY EQUIPMENT APPROPRIATE TO THE JOB.

OPERATING EQUIPMENT SAFELY REQUIRES THE FULL ATTENTION OF THE OPERATOR. DO NOT WEAR RADIO OR MUSIC HEADPHONES WHILE OPERATING MACHINE.

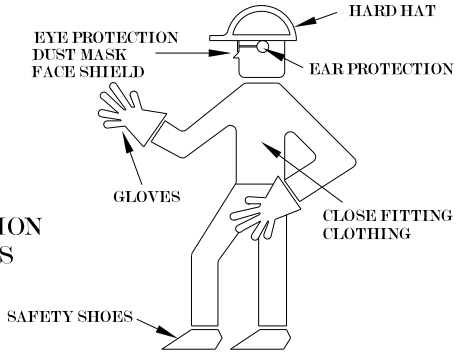

Safety

USE SAFETY LIGHTS AND DEVICES

PREVENT COLLISIONS BETWEEN OTHER ROAD USERS, SLOW MOVING TRACTORS WITH ATTACHMENT OR TOWED EQUIPMENT, AND SELF-PROPELLED MACHINES ON PUBLIC ROADS. FREQUENTLY CHECK FOR TRAFFIC FROM THE REAR, ESPECIALLY IN TURNS, AND USE HAND SIGNALS OR TURN SIGNAL LIGHTS.

USE HEADLIGHTS, FLASHING WARNING LIGHTS, AND TURN SIGNALS DAY AND NIGHT. FOLLOW LOCAL REGULATIONS FOR EQUIPMENT LIGHTING AND MARKING. KEEP LIGHTING AND MARKING VISIBLE AND IN GOOD WORKING ORDER. REPLACE OR REPAIR LIGHTING AND MARKING THAT HAS BEEN DAMAGED OR LOST. AN IMPLEMENT SAFETY LIGHTING KIT IS AVAILABLE FROM YOUR CRUSTBUSTER DEALER.

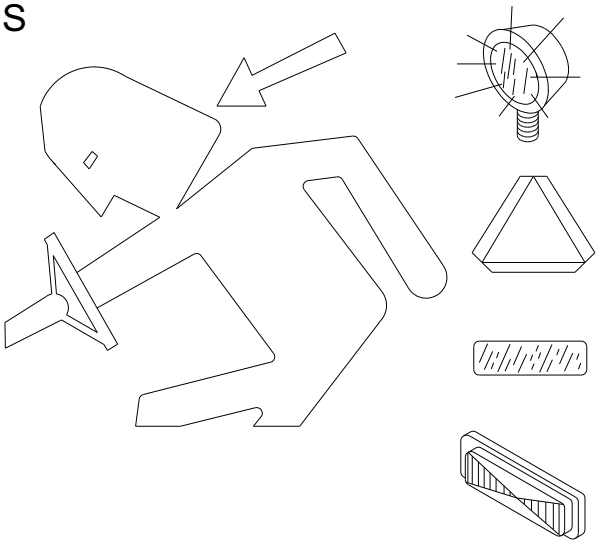

USE A SAFETY CHAIN

A SAFETY CHAIN WILL HELP CONTROL DRAWN EQUIPMENT SHOULD IT ACCIDENTLLY SEPERATE FROM THE DRAWBAR.

ATTACH THE SAFETY CHAIN TO THE TRACTOR DRAWBAR SUPPORT OR OTHER SPECIFIED ANCHOR LOCATION. PROVIDE ONLY ENOUGH SLACK IN THE CHAIN TO PERMIT TURNING.

SEE YOUR CRUSTBUSTER DEALER FOR A CHAIN WITH A STRENGTH RATING EQUAL TO OR GREATER THEN THE GROSS WEIGHT OF THE TOWED MACHINE. DO NOT USE SAFETY CHAIN FOR TOWING.

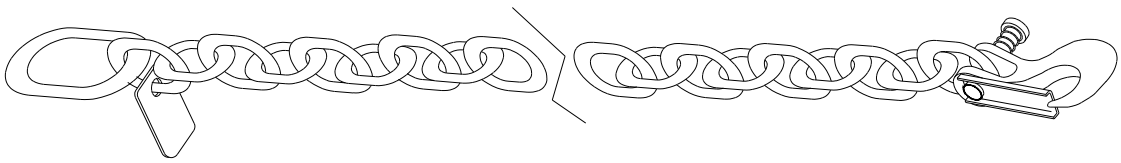

Safety

TRANSPORT SAFELY

IF EQUIPPED WITH ROW MARKERS, KNOW THE TRANSPORT HEIGHT OF YOUR MARKER ARM AND OVERHEAD WIRES. STOP SLOWLY.

ALWAYS RAISE THE FRONT JACK STAND BEFORE TRANSPORTING.

RAISE OPENERS FULLY AND PLACE OPENER LOCK-UP BRACKETS ON CYLINDERS TO PREVENT OPENERS FROM LOWERING. SECURE WITH PIN.

SHIFT THE TRACTOR INTO A LOWER GEAR WHEN TRANSPORTING DOWN STEEP SLOPES OR HILLS.

DO NOT TRANSPORT UNLESS THE GRAIN DRILL REFLECTORS, LIGHTS AND SMV EMBLEM ARE EASILY VISIBLE FROM THE REAR.

NEVER TRANSPORT THE GRAIN DRILL FASTER THAN 24 KM/H (15 MPH). REDUCE SPEED WHEN TRAVELING OVER ROUGH GROUND.

DO NOT TRANSPORT DRILL WITH GRAIN IN BOX.

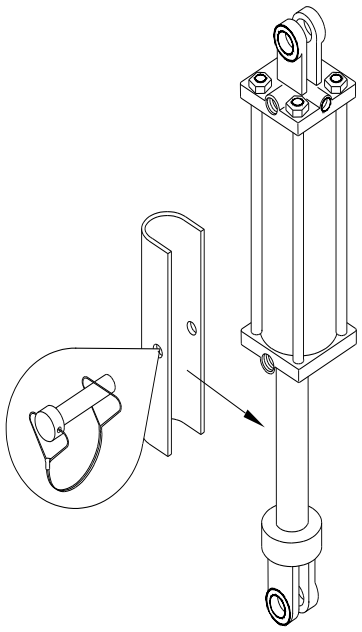

TOW LOADS SAFELY

STOPPING DISTANCE INCREASES WITH SPEED AND WEIGHT OF TOWED LOADS, AND ON SLOPES. TOWED LOADS WITH OR WITHOUT BRAKES THAT ARE TOO HEAVY FOR THE TRACTOR OR ARE TOWED TOO FAST CAN CAUSE LOSS OF CONTROL. CONSIDER THE TOTAL WEIGHT OF THE EQUIPMENT AND ITS LOAD.

OBSERVE RECOMMENDED MAXIMUM ROAD SPEEDS, OR LOCAL SPEED LIMITS WHICH MAY BE LOWER.

IF TOWED EQUIPMENT DOES NOT HAVE BRAKES, DO NOT TRAVEL MORE THAN 24 KM/H (15 MPH) AND DO NOT TOW LOADS MORE THAN 1.5 TIMES THE TRACTOR WEIGHT.

IF TOWED EQUIPMENT HAS BRAKES, DO NOT TRAVEL MORE THAN 40 KM/H (25 MPH) AND DO NOT TOW LOADS MORE THAN 4.5 TIMES THE TRACTOR WEIGHT.

ENSURE THE LOAD DOES NOT EXCEED THE RECOMMENDED WEIGHT RATIO. ADD BALLAST TO RECOMMENDED MAXIMUM FOR TRACTOR, LIGHTEN THE LOAD, OR GET A HEAVIER TOWING UNIT. THE TRACTOR MUST BE HEAVY AND POWERFUL ENOUGH WITH ADEQUATE BRAKING POWER FOR THE TOWED LOAD. USE ADDITIONAL CAUTION WHEN TOWING LOADS UNDER ADVERSE SURFACE CONDITIONS, WHEN TURNING, AND ON INCLINES.

Safety

PRACTICE SAFE MAINTENANCE

UNDERSTAND SERVICE PROCEDURE BEFORE DOING WORK. KEEP AREA CLEAN AND DRY.

NEVER LUBRICATE, SERVICE, OR ADJUST MACHINE WHILE IT IS MOVING. KEEP HANDS, FEET, AND CLOTHING FROM POWER DRIVEN PARTS. DISENGAGE ALL POWER AND OPERATE CONTROLS TO RELIEVE PRESSURE. LOWER EQUIPMENT TO THE GROUND. STOP THE ENGINE. REMOVE THE KEY. ALLOW MACHINE TO COOL.

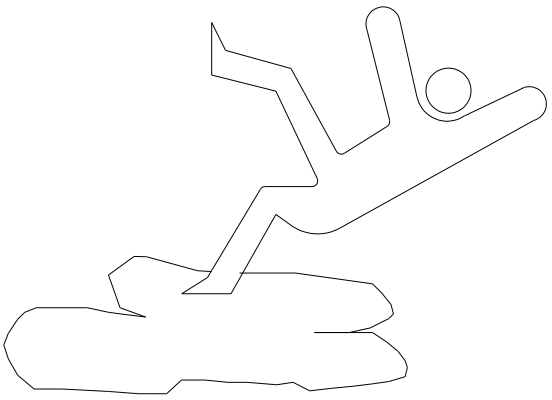

SECURELY SUPPORT ANY MACHINE ELEMENTS THAT MUST BE RAISED FOR SERVICE WORK.

KEEP ALL PARTS IN GOOD CONDITION AND PROPERLY INSTALLED. FIX DAMAGE IMMEDIATELY. REPLACE WORN OR BROKEN PARTS. REMOVE ANY BUILDUP OF GREASE, OIL, OR DEBRIS.

DISCONNECT BATTERY GROUND CABLE (-) BEFORE MAKING ADJUSTMENTS ON ELECTRICAL SYSTEMS OR WELDING ON MACHINE.

AVOID HIGH-PRESSURE FLUIDS

ESCAPING FLUID UNDER PRESSURE CAN PENETRATE THE SKIN CAUSING SERIOUS INJURY.

AVOID THE HAZARD BY RELIEVING PRESSURE BEFORE DISCONNECTING HYDRAULIC OR OTHER LINES. TIGHTEN ALL CONNECTIONS BEFORE APPLYING PRESSURE.

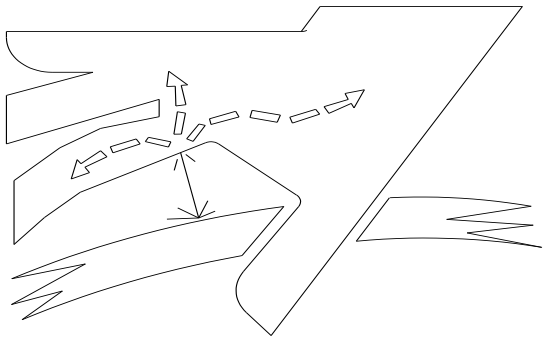

SEARCH FOR LEAKS WITH A PIECE OF CARDBOARD. PROTECT HANDS AND BODY FROM HIGH PRESSURE FLUIDS.

IF AN ACCIDENT OCCURS, SEE A DOCTOR IMMEDIATELY. ANY FLUID INJECTED IN THE SKIN MUST BE SURGICALLY REMOVED WITHIN A FEW HOURS OR GANGRENE MAY RESULT. DOCTORS UNFAMILIAR WITH THIS TYPE OF INJURY SHOULD REFERENCE A KNOWLEDGEABLE MEDICAL SOURCE.

CHARGE ROW MARKER HYDRAULIC SYSTEM

FALLING ROW MARKERS CAN CAUSE PERSONAL INJURY. BE SURE CYLINDERS AND ATTACHING HOSES ARE FULLY CHARGED WITH OIL BEFORE OPERATING. FAILURE TO DO SO WILL ALLOW MARKERS TO FALL RAPIDLY.

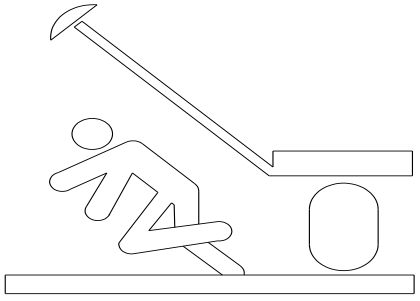

ALWAYS STAY CLEAR OF MARKERS WHEN RAISING OR LOWERING.

Before Unfolding and Operating This Equipment ---

Read and understand this owner's manual.



Transport & Safety Instructions



- When transporting drill, be aware you are towing a **24,000 lb.** load with up to **6,550 lb.** empty hitch weight.

  Tow width - 16' Tow length - 34'

  Take appropriate precautions in stopping, turning, etc. **DO NOT EXCEED 15 MPH.**

  Grain boxes are to be empty in transport to avoid exceeding the capacity of the 4740 drill center towing tires.

  Follow tire manufacturer's recommendations regarding inflation for towing.
  (Goodyear farm implement tire for highway and agriculture usage)

  Mfg stated capacity @ 90 PSI = 4870 lb.

  4740 Drill load per tow tire empty boxes = 4387 lb.
  4740 Drill load per tow tire full boxes = 5600 lb.

- Use a minimum hitch pin of 1" with lock nut to towing vehicle. DO NOT use a hairpin or wire to secure hitch pin. Make sure adequate safety chains are in place.

- **NEVER** use an unsecured pin in draw bar.

- Before transporting, make sure transport locks are in place on the wing carrier arms located under the hitch and on tool bar lift cylinders.

- Lug bolts should be checked prior to towing, after 1 mile of transport, within the next 20 miles and periodically thereafter. Check hubs for excess heating.

- Make sure center section drive wheel throw-out pin is disengaged when transporting

- Make sure 3-point linkages are raised completely to clear hitch.

- If your tractor does not already have a lighting receptacle, install one. Always plug in the drill lighting system to a correctly wired tractor and USE for transport safety. Wiring should be extended into tow tractor for turn and stop light.

- Connect the 7 pin lighting plug to the tractor receptacle and use at all times. Confirm the correct lights are operating if your tractor is not wired by industry standard code. Standard 7 pin receptacles are available through your dealer, local truck supply stores, and auto parts facilities.

- Before operating hydraulics, remove all transport locks or damage to drill will result.

- Never have more than **391 lbs.** per section on the walkboards without drill securely attached to tractor or towing vehicle.



CAUTION: Your drill weighs more than the towing vehicle. The drill is NOT equipped with brakes. **EXERCISE EXTREME CAUTION ! Maximum allowable speed - 15 mph.**

NEVER ALLOW ANYONE TO RIDE THE DRILL!

Fold and Unfold Instructions

- ○ Folding or unfolding of drill should be done on nearly level ground with the tractor transmission in neutral.
- ○ When drill is plumbed with markers, the manual selector valve located at rear and top of hitch will have to be shifted from marker to fold system.
- ○ During the fold and unfold operation, be sure to stay clear of pull bar slides located at front top of hitch.
- ○ Check that all wing carrier cylinder locks are removed.
- ○ Lower wings by rotating wing carrier arms down out of hooks on front of wing frames. Be sure wing carrier arms are clear of wing frames before unfolding. Unfolding is complete when pull bar slides are pulled back against stop, and locked in place by automatic locks located at front top of hitch. When folding, automatic locks will release pull bar slides.
- ○ Be sure wing carrier arms are lowered to clear wing frames when folding.
- ○ When pull bars come together against bumpers, and rollers on wing carrier arms are centered under guides on wing frames, drill is completely folded. Wings can now be raised.
- ○ Be sure rollers are securely in hooks on wing frames.
- ○ Install cylinder locks on wing carrier lift cylinders.
- ○ Drill is now ready for transport. USE GOOD JUDGEMENT AND SAFE OPERATING PROCEDURES WHEN TRANSPORTING.

Field Operating Checklist

____ Remove **ALL** transport locks.

____ Inflate tires to recommended air pressure.

____ Lubrication as required.

____ Seed shafts turned manually to check for obstructions and improper chain alignment on drive sprockets.

____ Correct sprocket selection and slot width for seed type and size.

____ Calibration as required for accuracy.

____ Drill adjusted at hitch for level field operation.

____ Cylinder stop set for proper toolbar rotation (Initial setting recommended - 1").
Both cylinders for each bar are set equally to avoid twisting tool bar.

____ Down pressure set for soil conditions.

____ Acre meter reset.

____ Lower drill while moving forward to avoid plugging openers.

____ Check seed depth and adjust accordingly.

____ Allow no riders.

____ After approximately 10 hours, check tool bar bolts, wheel bolts, presswheel swivel bolts, etc..
Make sure they are tight.

Field Operation

Recommended Operating Speed

Operating speeds of **4-7** mph will provide optimum results from your Min-Till and All Plant drill. Conventional field conditions can warrant speeds in the upper end of the range. High levels of "tough" residue due to morning dew or recent moisture, rough field conditions, rocky fields, or hard ground may require lower speeds for adequate performance.

Recommended Adjustment Procedure

Setting your drill requires adjustments be made in a particular order to ensure the opener will work properly. You will find it much easier to set the drill if adjustments are made in the following order:

1. **Level the drill**
2. **Set toolbar rotation**
3. **Set down pressure**
4. **Set seed depth**

Leveling the Drill

It is important to level the drill from front to back first. The tongue and box should be as close to level as you can get it by changing the drawbar height on the tractor (on offset drawbars), or by repositioning the clevis or mono hitch mounting. Any time a different tractor is hooked to the drill you should recheck level.

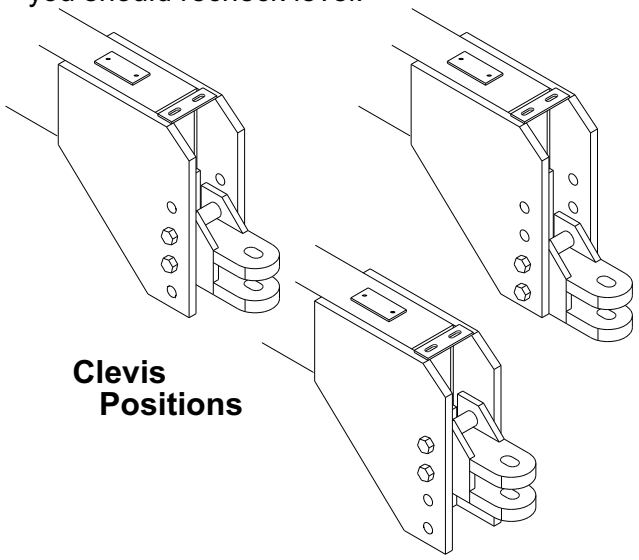

Clevis Positions

If you have purchased a Min-Till Drill, the operation procedures continue on **page 14**.

All Plant Drill

Opener and Tool Bar Adjustments

The All Plant units are attached to a 4x4 bar that is rotated by two cylinders on each section of the drill. Each cylinder uses a screw adjustable depth stop on the cylinder rod. The adjustable depth stop should be set to rotate the 4x4 bar **square** to the 7x7 frame in all conditions.

After the drill is leveled, rotation of the toolbar must be set. Using the screw adjustable stop on the lift cylinder, adjust rotation of the toolbar with the screw adjustment turned out **1"** for an initial recommended setting. Adjustment range of the presswheel depth quadrant will be affected if the toolbar does not rotate far enough or goes beyond perpendicular. If the toolbar is not set correctly, the opener travel range will not allow for penetration into low areas or provide clearance when meeting obstructions.

Check that both tool bar lift cylinders on each section are set the same. **DAMAGE TO TOOL BAR WILL RESULT IF THEY ARE NOT SET THE SAME.**

TOOL BAR LIFT CYLINDER SET AT RECOMMENDED SETTING.

CYLINDER RETRACTED WITH DEPTH SCREW STOP TURNED OUT 1". THIS MAKES CYLINDER LENGTH FROM PIN HOLE TO PIN HOLE 21¼" AS SHOWN.

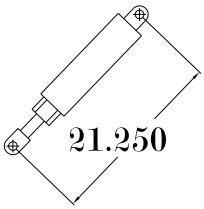

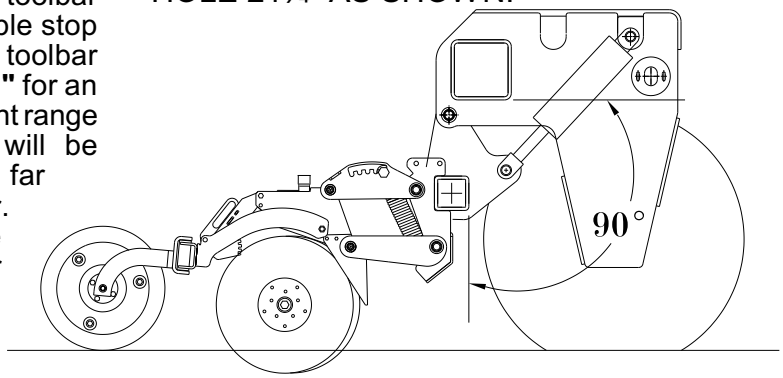

NOTE: SET BOTH CYLINDERS PER TOOL BAR THE SAME TO PREVENT TWISTING OF TOOL BAR.

All Plant Drill

Setting Down Pressure

The parallel linkage opener design assures the operator the opener blades and presswheel operate on the same level throughout the range of up and down travel. Due to the location of the down pressure spring, the pressure applied to the opener remains relatively constant in the entire range of travel. Changing the spring position from the first (top) notch to the last (bottom) notch provides 5 different levels of force. Each notch represents approximately these amounts of down pressure:

	1 Spring	2 Springs
Notch 1 (top)	120#	200#
Notch 2	160#	260#
Notch 3	200#	330#
Notch 4	240#	400#
Notch 5	260#	500#

It may be necessary to add ballast to the drill in the third or fourth notch. In order that all the opener springs are able to achieve the down pressure selected, the total weight of the drill must equal that amount of pressure times the number of row units on the drill. The parallel linkage arms should have a "live working action" during field operation. Setting the drill for too much down pressure without adequate weight will reduce the ability of the opener to flex and give good performance.

To determine the correct amount of down pressure, begin with the unit set in the lightest setting and the presswheel adjusted all the way up (or deepest setting). Put the openers in the ground and pull forward 50-100 feet. Stop and check opener penetration. If the opener is not penetrating to the depth you wish to plant, rotate toolbar upwards until clear of the ground, and add one more notch of down pressure. Repeat the process until the opener will penetrate to at least the depth you wish to plant.

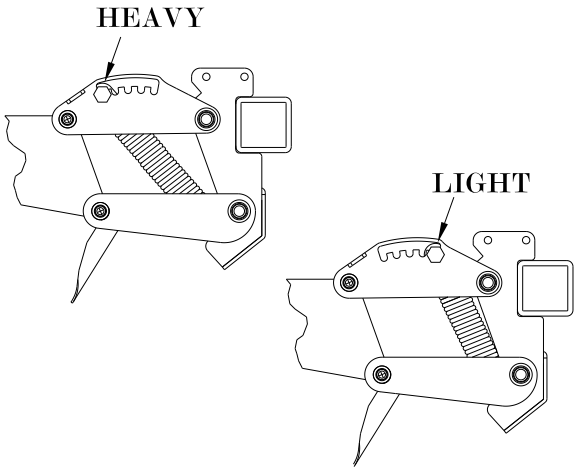

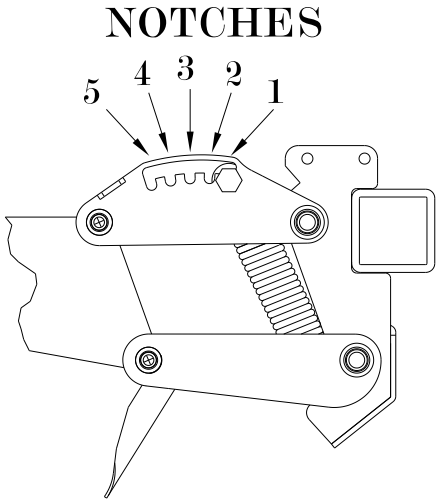

Additional Weighting

When operating the All Plant drill in hard ground conditions, it will be necessary to add weight to the frame. Optional weight bars are available to place into 7x7 main frame. Simply remove the bolted end caps and slide weight bars into the frame.

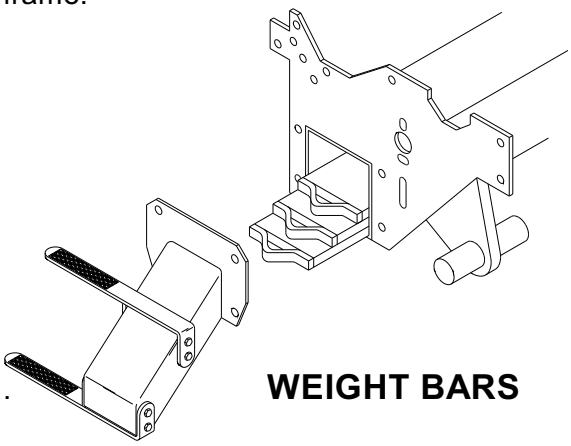

. **WEIGHT BARS**

Setting Seed Depth

Depth settings are achieved by moving the depth quadrant to affect the presswheel relationship to the opener. Changes are made by releasing the spring-loaded lock handle and moving the quadrant up or down with the hand slot. **LOWERING** the quadrant will set seed depth **shallow** --**RAISING** the quadrant will set seed depth **deeper**. Irregular seed placement can be caused by excessive field speed, residue hairpinning, rocky conditions, and cloddy or wet soil conditions.

All Plant Drill

Setting Seed Depth - *(cont.)*

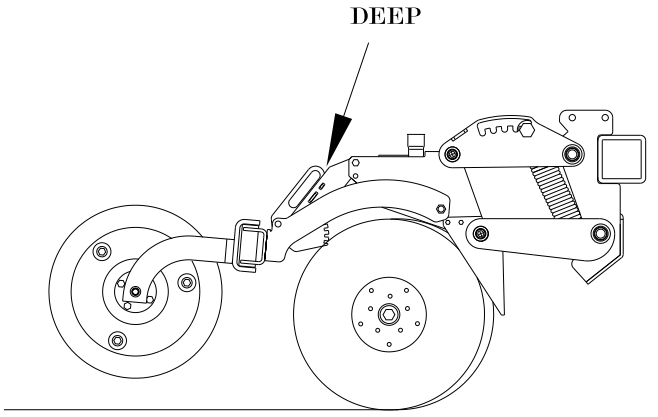

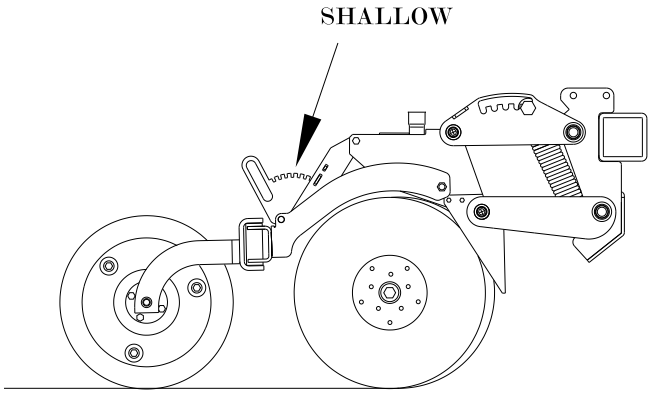

Minimum Tillage Conditions

The most challenging condition is often presented when a high level of residue is present in a "loose" soil environment. The opener blades will not cut residue cleanly and can often have a tendency to push or "bulldoze" residue ahead of the opener discs.

For minimum tillage operations, the lightest spring (top notch) is recommended. Firming the ground using a culti-packer or similar tool can aid in packing the residue for better cutting and blade penetration with less hairpinning.

The All Plant drill will work well in minimum tillage conditions if a "stale seedbed" is created. Soil worked at an earlier date, and allowed to firm and crust over can give the opener more resistance, allow for better cutting action, and create a firmer seed furrow. The first or second notch will usually provide enough down pressure to penetrate the soil.

Conventional Field Conditions

For tilled field conditions, the lightest spring setting (top notch) is recommended. More weight will be transferred to the carrying wheels of the drill when the toolbar is rotated. Behind tractor and drill tires it may be necessary to adjust individual row units for extra down pressure or different depth setting. **Setting the drill in conventional tillage will be easier if the tillage trips are kept shallow (2" - 4").**

If the first notch presents too much down pressure, the down pressure spring can be removed. With the spring removed, the effective down pressure of the opener is approximately 60#.

To remove spring, rotate tool bar until openers are clear of ground. This will release tension on spring allowing the removal of ½" x 6" bolt at the top of the spring. Unhook spring from rod at bottom of opener mount. When replacing spring, make sure the long hook end of spring is down.

No-Till Conditions

No-till presents many different conditions. Residue level and condition, previous tillage strips (ridges, plow dead furrows), soil type, soil moisture and rocky conditions all increase the demands on the no-till drill. Many variables and conditions not removed by tillage trips require greater attention to settings and speed. In some circumstances, it may be desirable to drill at a slight angle to existing rows. This will also randomize the opener disc wear and extend the maintenance interval for new blades.

As a general rule, less than ideal conditions will require slower speeds, to reduce hairpinning, improve opener penetration and residue cutting, reduce rock damage, and maintain good furrow formation and seed placement.

It is recommended you set the drill beginning with light down pressures and work your way up to heavier settings. If the presswheel presses firmly on the seed slot and control depth evenly, it is unnecessary to add more pressure. When increased down pressure does not improve penetration, or carrying wheels lose ground contact (and seed drive shaft stops), begin adding ballast with weight bars.

Min-Till **Drill**

Setting Down Pressure

Opener pressure setting is easy and allows separate settings for tire compaction areas to different soil conditions from field to field. Ratchet mechanism allows you to turn the pressure up or down. The locking key rolls up or down the notch gauge and locks to your desired setting from 140# to 250# per opener.

Notch 1 . . . . 140#
Notch 2 . . . . 190#
Notch 3 . . . . 210#
Notch 4 . . . . 230#
Notch 5 . . . . 250#

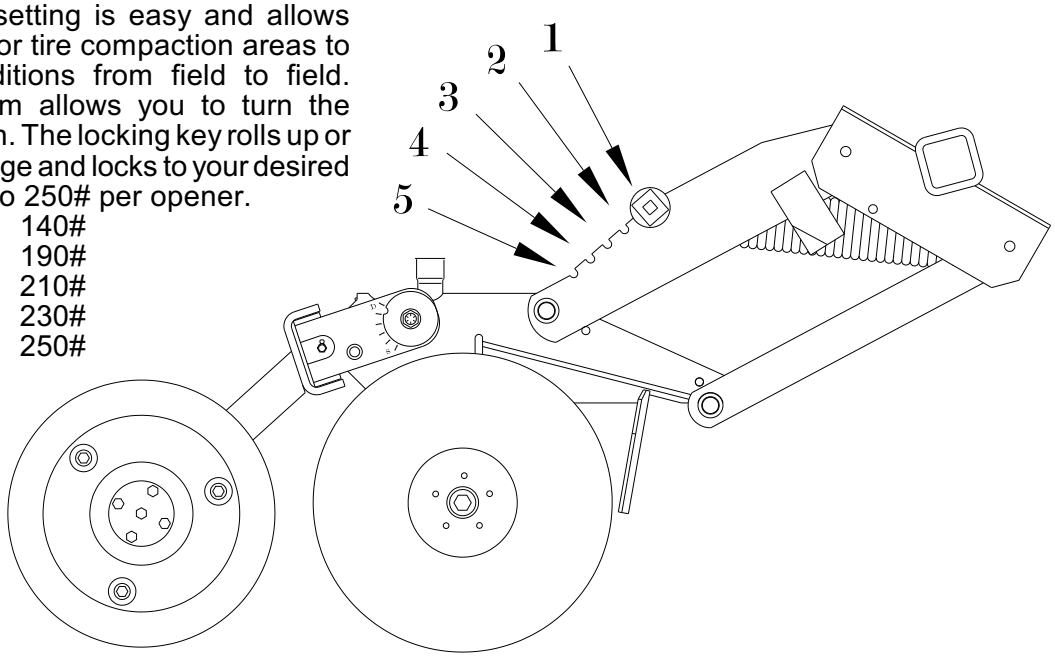

Down Pressure Spring Adjustment

Row units that run in wheel tracks can be set with heavier down pressure to assure solid presswheel action. The following will help in changing spring pressure.

1. Rotate the tool bar to raise the opener. Fold up the walkboard to give good access to the front of the opener.
2. Using ratchet type wrench, roll locking key up or down notch gauge to desired setting.

Setting Seed Depth

Understanding the tool bar operation and parallel linkage design will make setting the drill much easier. Refer to the drawing on the next page.

Rotating the rockershaft **DOWN**
sets seed depth more **SHALLOW.**

Each tool bar is controlled by a hydraulic cylinder within each wheel arm. An adjustable depth stop sets the travel of the cylinder which in turn determines how much the tool bar rotates.

To set deeper seed depth, screw the depth stop out and shorten the cylinder travel. The opener and presswheel relationship controls the depth of seed.

When lowering the openers, be sure the tool bar is in the full down position and the cylinder is retracted against the depth stop. The parallel linkage must be "set" to achieve the desired down pressure and depth control.

Individual presswheels may be set to correct for wheel track compaction. Usually, these will only need to be adjusted once if the same tractor is pulling the drill the entire season. At the rear of the opener, a cam rotation bracket holds the single presswheel arm. Turn the cam toward the **"D"** o**r "S"** to achieve the desired depth control.

LOWERING the presswheel
will set seed depth more **SHALLOW.**

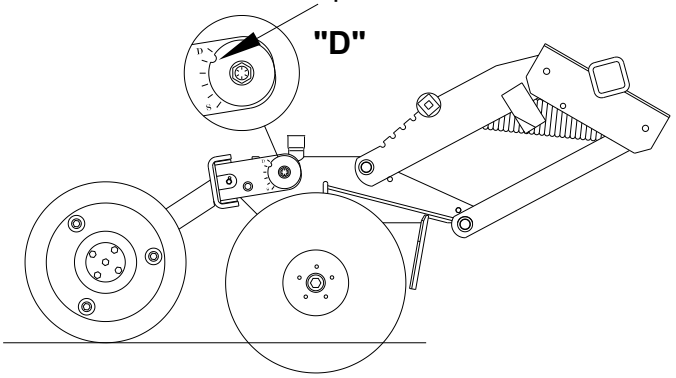

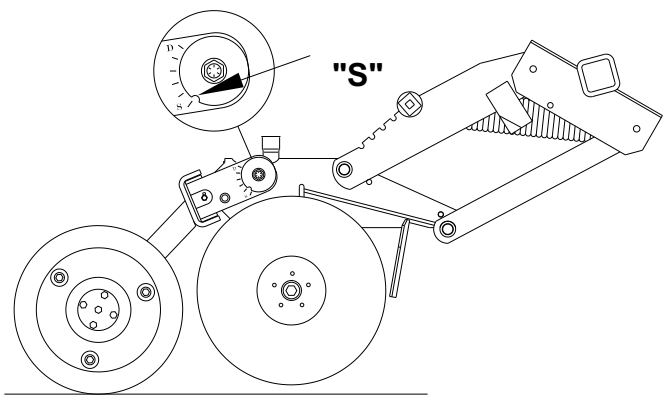

Min-Till Opener
Presswheel Adjustment with Tool Bar Rotation

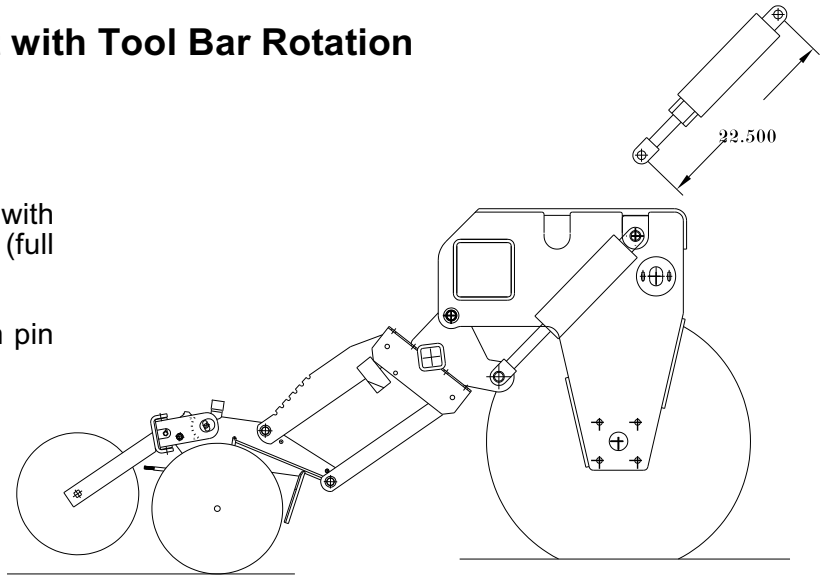

Tool bar lift cylinder retracted with depth screw stop turned out **2¼"** (full out adjustment).

This makes cylinder length from pin hole to pin hole **22½"** as shown.

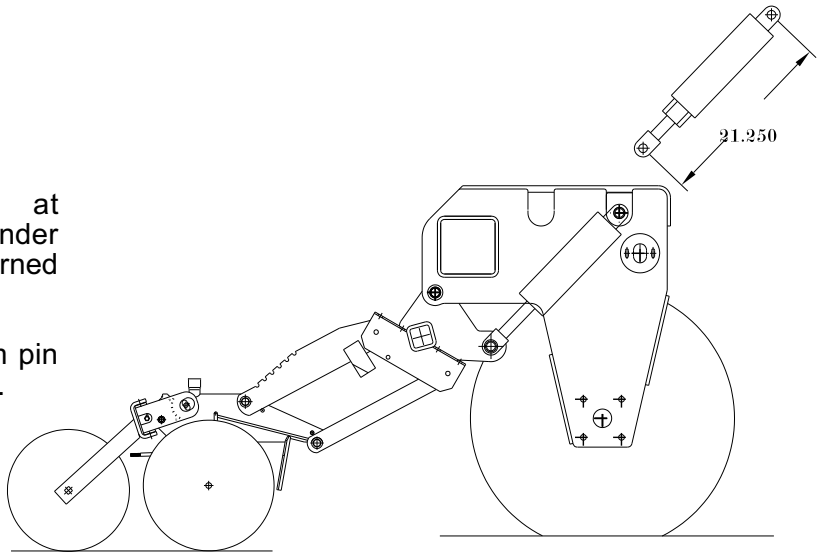

Tool bar lift cylinder set at recommended setting. Cylinder retracted with depth screw stop turned out **1"**.

This makes cylinder length from pin hole to pin hole **21¼"** as shown.

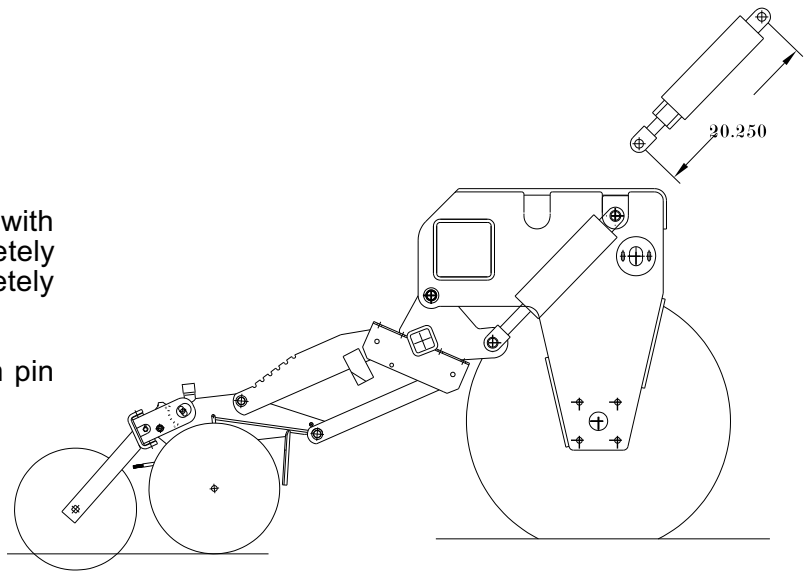

Tool bar lift cylinder retracted with depth screw stop turned completely in, allowing cylinder to completely retract.

This makes cylinder length from pin hole to pin hole **20¼"** as shown.

NOTE: Set both cylinders per tool bar the same to prevent twisting of tool bar.
NOTE: ⅛" of depth stop travel changes presswheel depth ±¼.

Lubrication and Service

Proper maintenance will extend the life of your drill. Refer to the list and drawings below and drawings in the repair parts section for lubrication requirements. Use a high quality grease in bearings and pivot points. On greaseable sealed bearings, be careful not to over grease and destroy the dirt seal. Oil chains with a chain lube. A light penetrating oil or liquid graphite should be used on seed cups initially and at the end of each season.

1 Front pull bar slides as needed
2 Wing carrier rollers and wing carrier arms as needed
3 Fold hinges as needed
4 Fold flex arms as needed
5 Center drive engage and disengage sprocket once per season
6 Drive line bearings (See drive line assembly) once per season
7 Clutch halves (See drive line assembly) every day
8 Sprocket box bearings (See gearbox assembly) once per season
9 Wing wheel bearings once per season
10 Tool bar pivots every day
11 Presswheel pivots every day
12 Marker mount and swivel every day
13 3-Point Hitch as needed

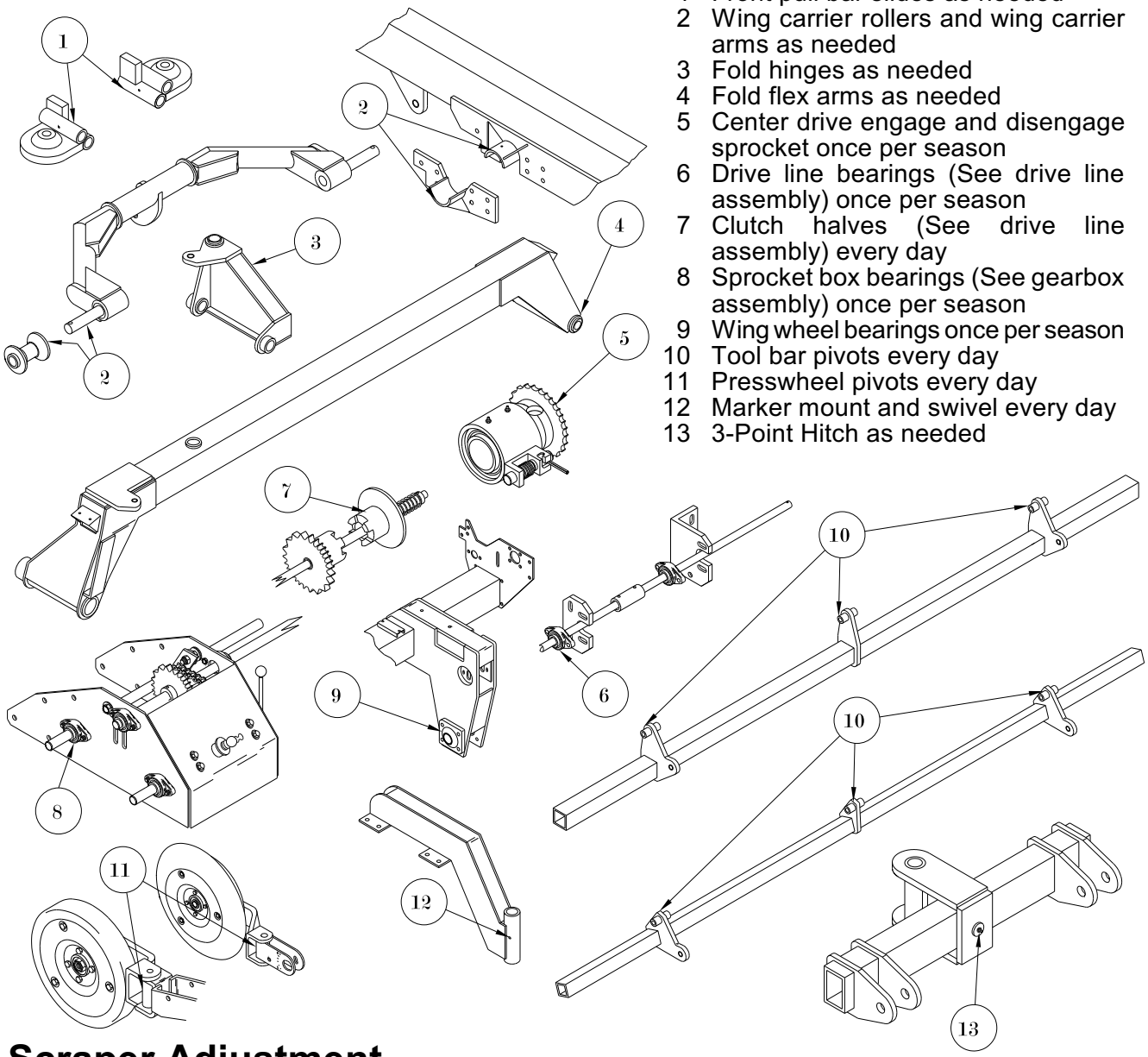

Scraper Adjustment

Opener blade inside scrapers are spring loaded and require no adjustment. To replace the scraper blades, remove the rear lock nut and slide both blades from the stem. Assemble with new blades and replace onto stem being careful not to over tighten lock nut.

NOTE: **Do not over tighten lock nut.** Be sure scrapers move freely. Failure to do so will result in damage to scrapers and proper operation of scrapers.

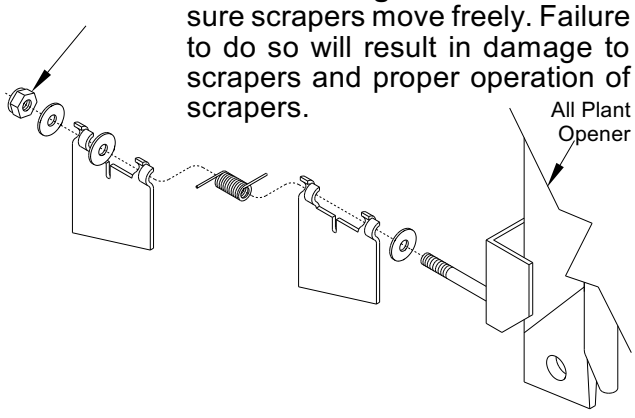

SPRING LOADED SCRAPER

Blade Gap Adjustment

Offset blade designs form better seed furrows and penetrate and cut in tougher planting conditions. If using the **ALL PLANT** opener, as the blades wear the gap between blades will increase. Removing each blade from the opener bracket allows the operator to take shim washers from behind the bearing and re-adjust the blade gap for better performance. Shim washers that are removed **must** then be placed on outside of blade to maintain length of bolt. Maintain a **3/16" to 1/4"** clearance between blades, measuring at the pinch point. Inadequate clearance will increase wear on the inside of the lead blade and mean quicker replacement. The lead blade changes sides on the opener on each half of the drill. The right blade on **ALL PLANT** openers is installed with a right hand threaded bolt. The left blade is installed with a left hand threaded bolt.

If the **MIN-TILL** opener is used, the offset design is achieved by using a 15" leading blade and a 13" trailing blade. One bolt and lock nut secures both blades in the proper angle by tightening the bearing races against the opener bracket. Be sure to hold the bolt as the nut is removed or replaced. The bolt is bent to the proper angle for the blades to meet at the front pinch point. Since it is mounted with one bolt, the **MIN-TILL** opener blades require **no gap** at the pinch point. Shim washers may be needed to achieve this. When tightening blades, rotate the bent bolt until bearing races are flat and flush against beveled surface of opener blade bracket.

ALL PLANT opener shown

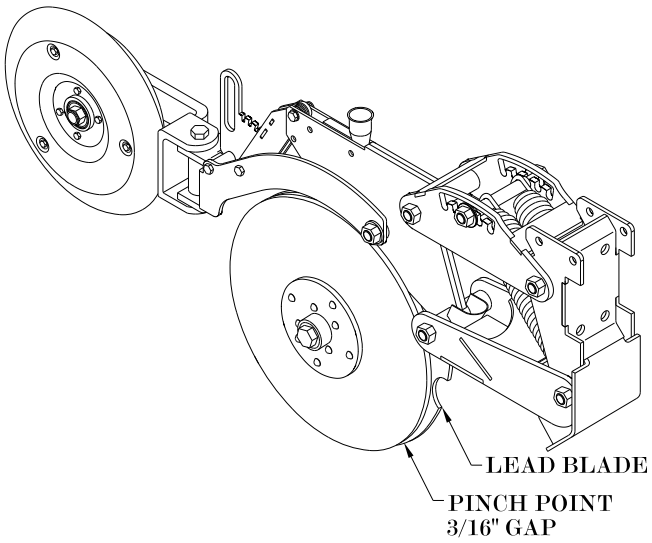

Tandem Wheel Drive Clutch

The tandem wheel on the center section that drives a seed shaft is manufactured with a manual throw-out type clutch.

IMPORTANT: This will need to be disengaged before road transport.

On the wing sections, tandem wheels that drive a seed shaft are manufactured with a friction disc type clutch. If the drive wheel encounters a hole, ridge, or other situation that may cause a delay in adequate ground contact, the other wheel will "take over" driving the seed shaft. During turns, or in the folding operation, it is necessary the non-drive wheel can free wheel.

The tire is bolted to the hub using three tap bolts with tapered wheel nuts and three wheel bolts. The three tap bolts also bolt on the clutch drive plate to the backside of the hub. If the wheel must be removed for service, remove ONLY the three tapered wheel nuts and three wheel bolts. Pressure on the two friction discs has been factory set. As drill is used, this may have to be adjusted. This is done by tightening the four nylock lock nuts and compressing the four rubber springs to the desired pressure for wheel slippage. This must be done with equal pressure on all four springs. DO NOT over tighten the four rubber spring bolts, as this will cause damage to the tire and wheel assembly, and the clutch housing.

CAUTION!

At the start of a new drilling season, or anytime the drill is going to be used, especially if the drill has been stored out in the weather all winter long, make sure the clutch drive is not frozen up. Failure to do this will result in damage to the clutch assembly.

To make sure the clutch is not frozen up, loosen up the clutch bolts. This should free the disc torque limiter. If not, use a knife to free the torque limiter from one or the other. Reset clutch back to where it was. **Do Not** use any oil or penetrating oil of any kind.

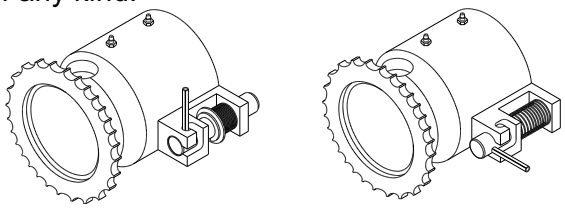

ENGAGED DISENGAGED
CENTER DRIVE CLUTCH

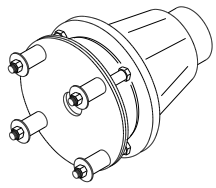

WING DRIVE CLUTCH
(See page 49 for clutch components)

Calibration, Seed Rates and Sprocket Box

Calibration/Drilling Rates

Planting the right rate can be frustrating. Sometimes the end result is not what the rate chart indicates. Seeding rate is affected by seed size, seed treatments, foreign material, test weight, and tire air pressure.

1. Always plant clean seed.
2. Check tire air pressure.
3. Seed treatments vary by type and time of application.

Some seeds are treated at the processor. Drill box treatments are common methods of application. Each of these can "gum" up the wobble' slot cup halves and reduce final seeding rate. Treated seed often flows differently than non-treated seed.

A general method for checking quantities drilled is as follows:

1. Set drill for desired seeding rate.
2. Fill the box level; then pull drill for a short distance to settle seed. Refill box exactly level full.
3. Drill a calculated one acre.
4. Carefully weigh the seed required to refill the box level full. Box capacity:

   4740 40½ bushels per box

5. Compare the amount used versus that stated on the rate chart.
6. Adjust seeding rate by changing the sprocket combination or wobble slot width.

One method involves catching seed from one or more seed cups and utilizing a density scale to determine actual rates. These scales are commercially available, inexpensive and very easy to use. Information can be obtained from CrustBuster®/Speed King, Inc.

Sprocket Box Operation

The sprocket box design will enable the operator to set a wobble slot width once for a given seed size and change rates by changing the speed of the seed shaft. Choose a range of seeding rates that you wish to operate in, set the slot width as indicated by the chart and simply change knob position with the slide handle to effect seed rate. A narrow slot width will produce more even distribution and spacing in the row.

When changing derailleur, be sure openers are rotated out of ground.

To change position, move throw-out lever toward the rear to disengage the chain from the lower sprocket. Pull the spring loaded collar outward with two fingers and slide side to side to the desired gear position. Pull throw-out lever forward to re-engage the chain.

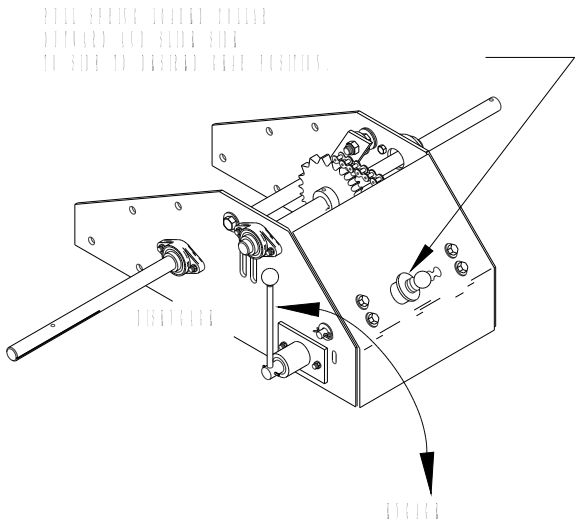

Wobble Slot Seed Cup Adjustments and Service

The wobble slot seed cups should be checked against the slot gauge initially and anytime service has been performed on the seed shaft or individual seed cups. Refer to the drawing below for proper adjustment if repairs have been made.

To verify that all seed cups are set the same on the shaft, start with all cups fully closed. A slight crack between the cup halves would be considered normal tolerance. If any individual cup is not "zeroed out," open the slot width using the adjusting handle, loosen allen set screws and adjust to equal others on shaft.

To determine if the gauge is reflecting the correct seed cup slot width, open the seed cups using the adjusting handle. Notice that wobble slot halves are positioned differently on the hex shaft. Identify a cup that will accept a piece of ½" keystock or other measuring device comfortably and give solid contact against each half. It may be necessary to turn the hex shaft slightly to position the particular seed cup correctly. Close the slot width firmly against the measuring device. At the cup next to the wobble slot adjusting handle, position the gauge to equal the slot width you have just measured with the keystock by loosening with a screwdriver and sliding in or out.

Small changes in rate can be made by opening or closing slot width. To close the slot width with grain in the box, close the slot down a maximum of 1/8" and then rotate the shaft one turn to clear the slot. Repeat this process until the desired slot width is selected.

Seeding rate is affected by seed size, seed treatments, foreign material, and test weight. Refer to seed rate charts as guidelines for desired seeding rates.

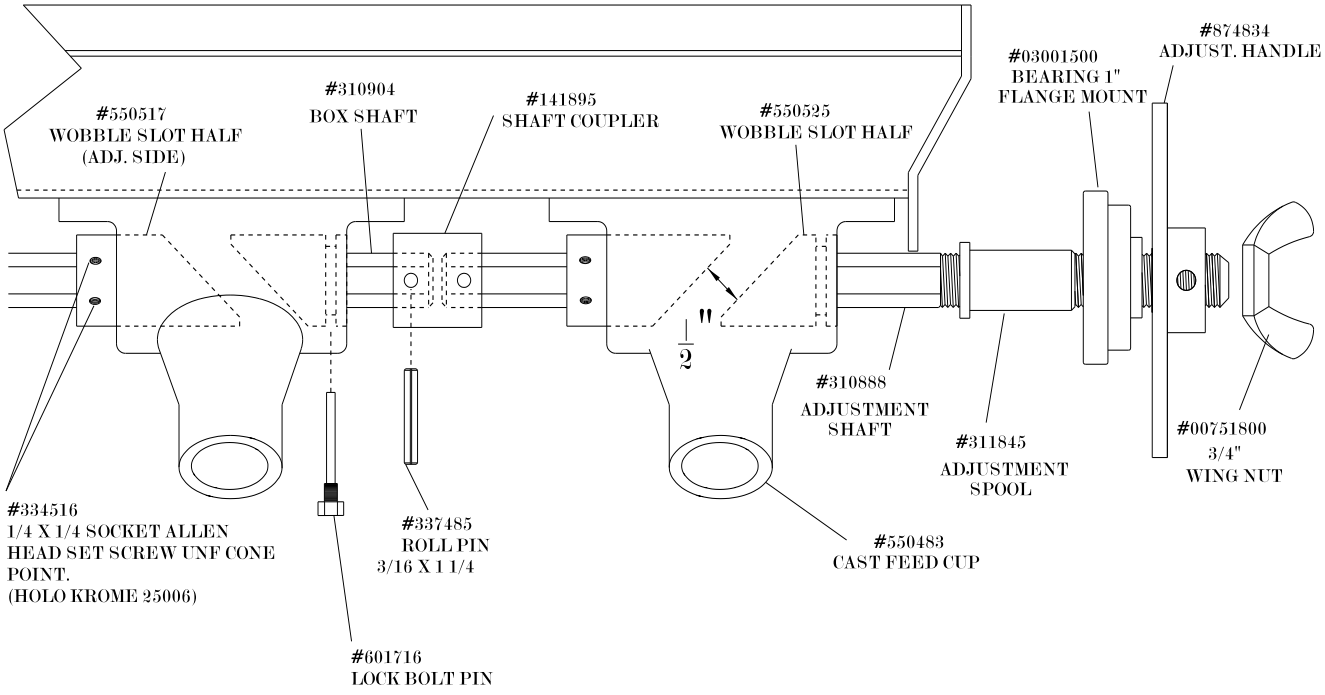

Chain Tension on Drive Shaft

When making sprocket changes to the seed shaft, tighten chain to leave approximately 1/2" of flex. The final sprocket must allow the hex shaft to slide within the sprocket when the adjusting lever is moved. If the chain is too tight, bowing and binding of box end will occur making seed cup adjustment difficult. Lightly lubricate the shaft where the sprocket will slide. **DO NOT OVERTIGHTEN CHAIN.**

Sprocket Locations
4740 Center Section

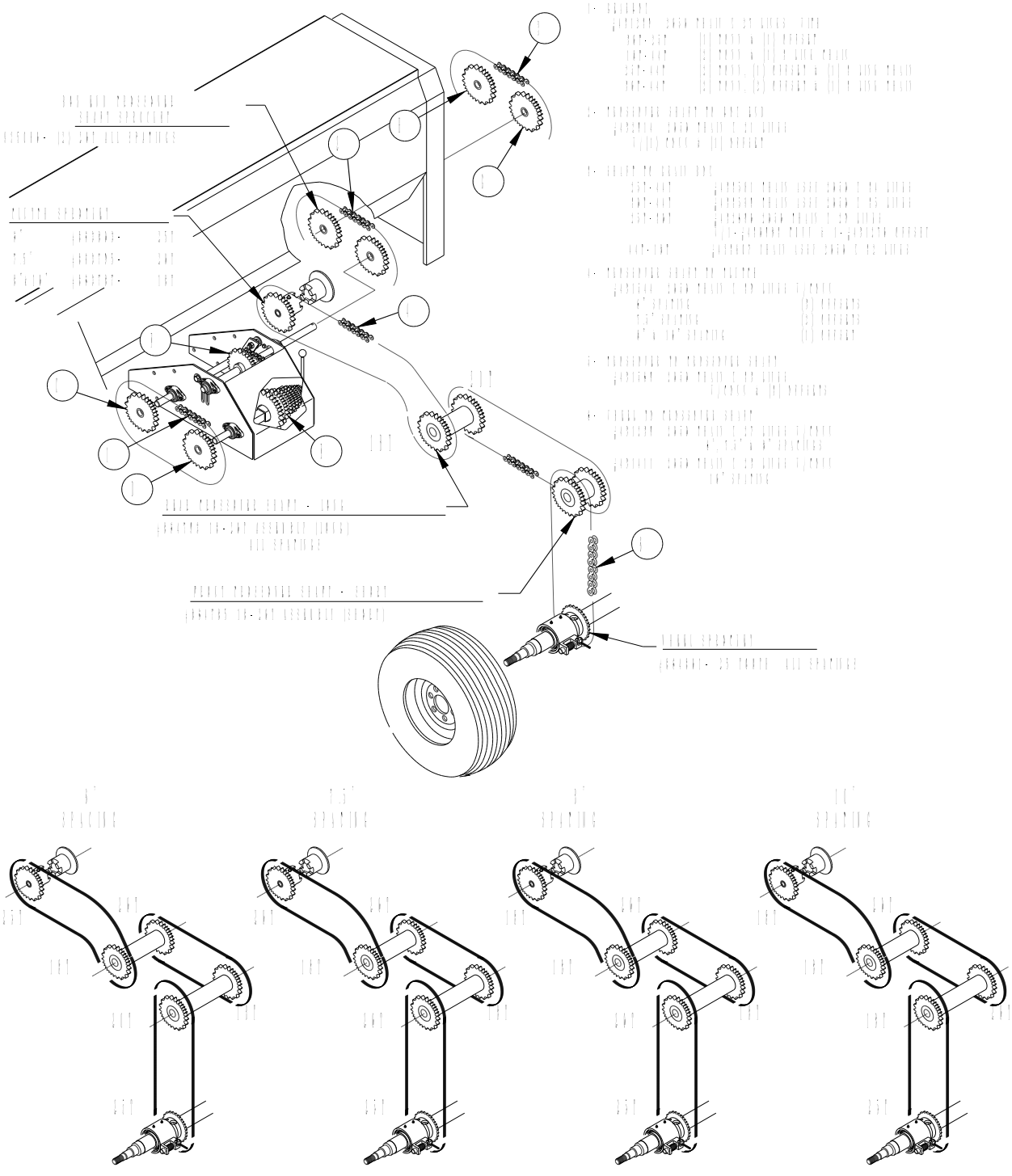

Sprocket Locations
4740 Wing Section

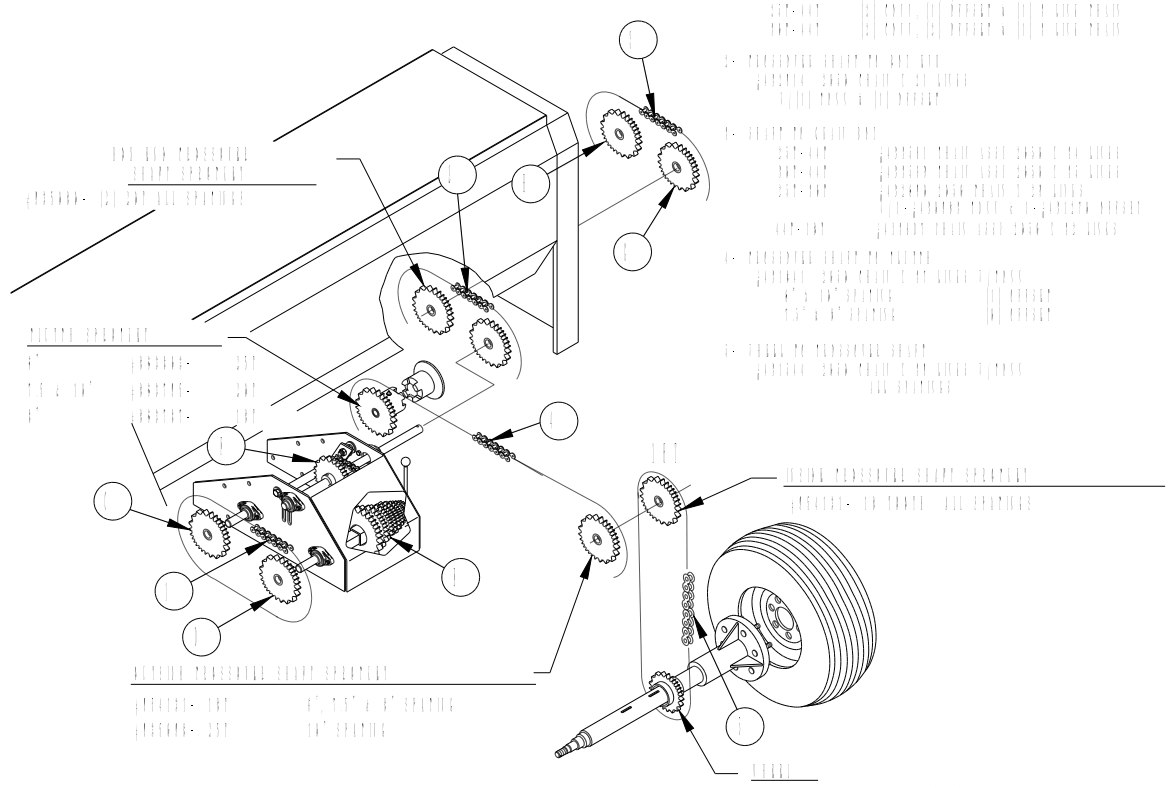

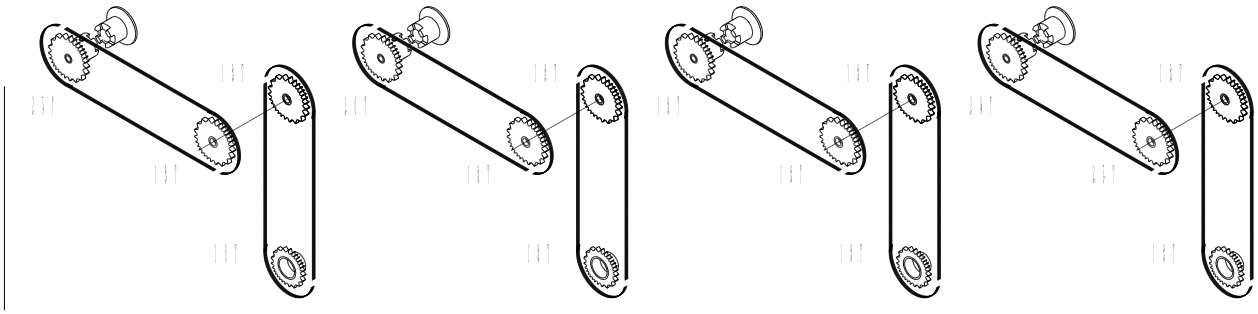

Meter Man Acreage Counter (Option)

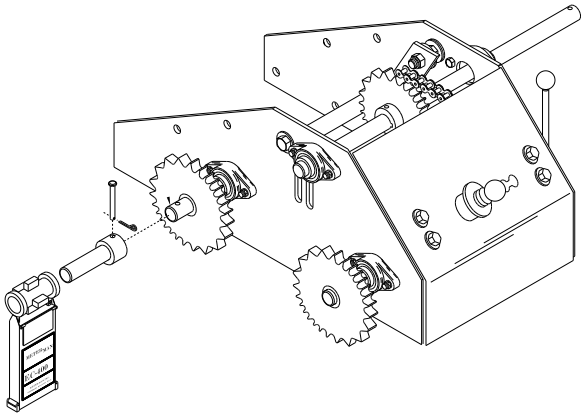

Calibration
Use the formulas below to determine your implement calibration factor or refer to the predetermined factors listed when using CrustBuster drills.

DT = Distance traveled with one counter shaft rotation (when using two magnets, divide DT by 2).

WW = Working Width of implement (in inches).

$$\frac{WW \times DT/2}{6272640} = \text{Calibration factor}$$

NOTE: Whenever a gear change is made on the shaft being monitored, you will need to enter a new calibration factor.

Entering Calibration Factor
1. Depress ON/C
2. Round off factor to 5 digits
3. Enter factor (remember decimal point)
4. Depress **+** key
5. Depress **=** key
6. Depress decimal point (screen display 0)

CrustBuster 4740 Drill Meter Man Factors

Spacing	
7 ½"	.00395
10"	.00284
15"	.00395

Sprocket Box Adjustment
The sprocket box design will enable the operator to set a wobble slot width once for a given seed size and change rates by changing the speed of the seed shaft.

Choose a range of seeding rates that you wish to operate in, set the slot width as indicated by the chart and simply change knob position with the slide handle to select seed rate.

A narrow slot width will produce more even distribution and spacing in the row.

For round seeds, the ideal slot width can be determined by measuring seed size. To attain singular file flow of seeds from the wobble slot seed cup, the slot width should be greater than one and one half (1 ½) times the average seed size, but less than two (2) times the average size.

Ideal Slot Width = Greater than
(>) 1½ times seed size
Less than
(<) 2 times seed size

To determine average seed size, lay out 20-30 seeds in single file, each seed touching each other. A short piece of angle iron can help align the seeds evenly. Measure distance from end to end with a ruler. Divide that measurement by the number of seeds to equal the average seed size. Multiply average seed size times 1½ to find the minimum width. Multiply average seed size times 2 to find the maximum width. The slot width should be ideal when set between these values.

Example: 30 seeds measure 9 inches.

9 " divided by 30 seeds	=	.30"
.30" times 1.5	=	.45"
.30 times 2	=	.60"

Ideal slot width is greater than .45", less than .60"
Ideal slot width = ½"

Refer to seed chart ½" column as a starting point for setting final seed rate.

To change position, move throw-out lever toward the rear to disengage the chain from the lower sprocket. Pull the spring loaded collar outward with two fingers and slide side to side to the desired gear position. Pull throw-out lever forward to re-engage the chain.

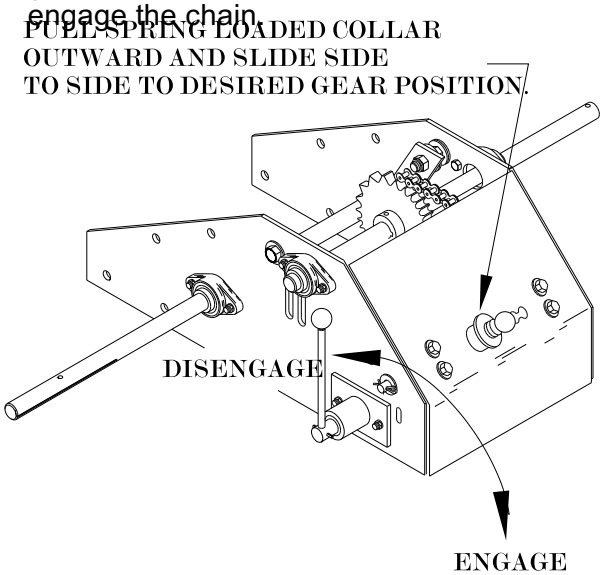

Seed Rate Charts

ALFALFA

Sprockets						Slot Width	
		Derailleur		Box End		Pounds/Acre	
C	D	E	F	G	H	1/8"	1/4"
18	44	16	30	25	44	5	8
18	44	17	30	25	44	5	9
18	44	18	30	25	44	5	9
18	44	19	30	25	44	6	10
18	44	20	30	25	44	6	11
18	44	21	30	25	44	6	11
18	44	22	30	25	44	7	12
18	44	23	30	25	44	7	12
25	44	16	30	25	44	7	12
25	44	17	30	25	44	7	12
25	44	18	30	25	44	8	13
25	44	19	30	25	44	8	14
25	44	20	30	25	44	8	15
25	44	21	30	25	44	9	15
25	44	22	30	25	44	9	16
25	44	23	30	25	44	10	17
30	44	16	30	30	44	10	17
30	44	17	30	30	44	10	18
30	44	18	30	30	44	11	19
30	44	19	30	30	44	12	20
30	44	20	30	30	44	12	21
30	44	21	30	30	44	13	22
30	44	22	30	30	44	13	23
30	44	23	30	30	44	14	24
30	25	16	30	25	44	14	25
30	25	17	30	25	44	15	26
30	25	18	30	25	44	16	28
30	25	19	30	25	44	17	29
30	25	20	30	25	44	18	31
30	25	21	30	25	44	19	32
30	25	22	30	25	44	20	34
30	25	23	30	25	44	21	35
30	25	16	30	25	30	21	36
30	25	17	30	25	30	22	38
30	25	18	30	25	30	24	41
30	25	19	30	25	30	25	43
30	25	20	30	25	30	26	45
30	25	21	30	25	30	28	48
30	25	22	30	25	30	29	50
30	25	23	30	25	30	30	52

BARLEY

Sprockets						Slot Width		
		Derailleur		Box End		Pounds/Acre		
C	D	E	F	G	H	1/2"	5/8"	3/4"
30	25	16	30	25	44	31	38	45
30	25	17	30	25	44	33	40	48
30	25	18	30	25	44	34	43	51
30	25	19	30	25	44	36	45	54
30	25	20	30	25	44	38	47	57
30	25	21	30	25	44	40	50	60
30	25	22	30	25	44	42	52	63
30	25	23	30	25	44	44	54	65
30	25	16	30	25	30	45	56	67
30	25	17	30	25	30	48	59	71
30	25	18	30	25	30	51	63	75
30	25	19	30	25	30	53	66	79
30	25	20	30	25	30	56	69	83
30	25	21	30	25	30	59	73	88
30	25	22	30	25	30	62	76	92
30	25	23	30	25	30	65	80	96
30	25	16	30	30	25	65	80	96
30	25	17	30	30	25	69	85	102
30	25	18	30	30	25	73	90	108
30	25	19	30	30	25	77	95	114
30	25	20	30	30	25	81	100	120
30	25	21	30	30	25	85	105	126
30	25	22	30	30	25	89	110	132
30	25	23	30	30	25	93	115	138
25	30	16	30	44	18	92	113	136
25	30	17	30	44	18	97	120	144
25	30	18	30	44	18	103	127	153
25	30	19	30	44	18	109	134	161
25	30	20	30	44	18	114	141	170
25	30	21	30	44	18	120	149	178
25	30	22	30	44	18	126	156	187
25	30	23	30	44	18	132	163	195

Seed Rate Charts

CANOLA

Sprockets						Slot Width		
		Derailleur		Box End		Pounds/Acre		
C	**D**	**E**	**F**	**G**	**H**	**3/16"**	**1/4"**	**3/8"**
18	44	16	30	* 12	44	2.7	3.6	5.4
18	44	17	30	12	44	2.8	3.7	5.6
18	44	18	30	12	44	3.0	4.0	6.0
18	44	19	30	12	44	3.2	4.3	6.4
18	44	20	30	12	44	3.3	4.4	6.6
18	44	21	30	12	44	3.5	4.7	7.0
18	44	22	30	12	44	3.7	4.9	7.4
12	44	23	30	12	44	3.9	5.2	7.8
* Optional 12 Tooth Sprocket (Part # 935072)								
18	44	16	30	25	44	5	7	10
18	44	17	30	25	44	5	8	11
18	44	18	30	25	44	5	8	11
18	44	19	30	25	44	6	8	12
18	44	20	30	25	44	6	9	13
18	44	21	30	25	44	6	9	13
18	44	22	30	25	44	7	10	14
18	44	23	30	25	44	7	10	14
25	44	16	30	25	44	7	10	14
25	44	17	30	25	44	7	10	15
25	44	18	30	25	44	8	11	16
25	44	19	30	25	44	8	12	17
25	44	20	30	25	44	8	12	17
25	44	21	30	25	44	9	13	18
25	44	22	30	25	44	9	13	19
25	44	23	30	25	44	10	14	20
30	44	16	30	30	44	10	14	20
30	44	17	30	30	44	10	15	21
30	44	18	30	30	44	11	16	23
30	44	19	30	30	44	12	17	24
30	44	20	30	30	44	12	18	25
30	44	21	30	30	44	13	19	26
30	44	22	30	30	44	13	19	28
30	44	23	30	30	44	14	20	29
30	25	16	30	25	44	14	21	29
30	25	17	30	25	44	15	22	31
30	25	18	30	25	44	16	23	33
30	25	19	30	25	44	17	25	35
30	25	20	30	25	44	18	26	37
30	25	21	30	25	44	19	27	39
30	25	22	30	25	44	20	28	41
30	25	23	30	25	44	21	30	42
30	25	16	30	25	30	21	30	43
30	25	17	30	25	30	22	32	46
30	25	18	30	25	30	24	34	49
30	25	19	30	25	30	25	36	51
30	25	20	30	25	30	26	38	54
30	25	21	30	25	30	28	40	57
30	25	22	30	25	30	29	42	59
30	25	23	30	25	30	30	44	62

CORN

Sprockets						Slot Width		
		Derailleur		Box End		Pounds/Acre		
C	**D**	**E**	**F**	**G**	**H**	**1/2"**	**5/8"**	**3/4"**
18	44	16	30	25	44	6	8	10
18	44	17	30	25	44	6	8	10
18	44	18	30	25	44	6	9	11
18	44	19	30	25	44	7	9	11
18	44	20	30	25	44	7	10	12
18	44	21	30	25	44	7	10	13
18	44	22	30	25	44	8	11	13
18	44	23	30	25	44	8	11	14
25	44	16	30	25	44	8	11	13
25	44	17	30	25	44	8	12	14
25	44	18	30	25	44	9	12	15
25	44	19	30	25	44	9	13	16
25	44	20	30	25	44	10	14	17
25	44	21	30	25	44	10	14	18
25	44	22	30	25	44	11	15	18
25	44	23	30	25	44	11	16	19
30	44	16	30	30	44	11	16	19
30	44	17	30	30	44	12	17	20
30	44	18	30	30	44	13	18	22
30	44	19	30	30	44	13	19	23
30	44	20	30	30	44	14	20	24
30	44	21	30	30	44	15	21	25
30	44	22	30	30	44	15	22	26
30	44	23	30	30	44	16	23	28
30	25	16	30	25	44	17	23	28
30	25	17	30	25	44	18	25	30
30	25	18	30	25	44	19	26	32
30	25	19	30	25	44	20	27	34
30	25	20	30	25	44	21	29	35
30	25	21	30	25	44	22	30	37
30	25	22	30	25	44	23	32	39
30	25	23	30	25	44	24	33	41
30	25	16	30	25	30	26	34	42
30	25	17	30	25	30	27	36	44
30	25	18	30	25	30	28	38	47
30	25	19	30	25	30	29	40	50
30	25	20	30	25	30	31	42	52
30	25	21	30	25	30	32	44	55
30	25	22	30	25	30	34	46	58
30	25	23	30	25	30	35	48	60
30	25	16	30	30	25	35	48	60
30	25	17	30	30	25	37	52	64
30	25	18	30	30	25	40	55	68
30	25	19	30	30	25	42	58	72
30	25	20	30	30	25	44	61	75
30	25	21	30	30	25	46	64	79
30	25	22	30	30	25	48	67	83
30	25	23	30	30	25	51	70	87

Seed Rate Charts

COTTON

Sprockets						Slot Width		
		Derailleur		Box End		Pounds/Acre		
C	**D**	**E**	**F**	**G**	**H**	**1/2"**	**5/8"**	**3/4"**
18	44	16	30	25	44	8	9	12
18	44	17	30	25	44	8	10	12
18	44	18	30	25	44	9	10	13
18	44	19	30	25	44	9	11	14
18	44	20	30	25	44	10	12	14
18	44	21	30	25	44	10	12	15
18	44	22	30	25	44	11	13	16
18	44	23	30	25	44	11	13	17
25	44	16	30	25	44	11	13	16
25	44	17	30	25	44	11	14	17
25	44	18	30	25	44	12	14	18
25	44	19	30	25	44	13	15	19
25	44	20	30	25	44	13	16	20
25	44	21	30	25	44	14	17	21
25	44	22	30	25	44	15	18	22
25	44	23	30	25	44	15	19	23
30	44	16	30	30	44	15	19	23
30	44	17	30	30	44	16	20	24
30	44	18	30	30	44	17	21	26
30	44	19	30	30	44	18	22	27
30	44	20	30	30	44	19	23	29
30	44	21	30	30	44	20	24	30
30	44	22	30	30	44	21	26	32
30	44	23	30	30	44	22	27	33
30	25	16	30	25	44	23	27	34
30	25	17	30	25	44	24	29	36
30	25	18	30	25	44	26	31	38
30	25	19	30	25	44	27	32	40
30	25	20	30	25	44	28	34	42
30	25	21	30	25	44	30	36	44
30	25	22	30	25	44	31	37	46
30	25	23	30	25	44	33	39	49

FESCUE

Sprockets						Slot Width		
		Derailleur		Box End		Pounds/Acre		
C	**D**	**E**	**F**	**G**	**H**	**3/8"**	**1/2"**	**5/8"**
18	44	16	30	25	44	4	6	7
18	44	17	30	25	44	5	6	8
18	44	18	30	25	44	5	6	8
18	44	19	30	25	44	5	7	9
18	44	20	30	25	44	5	7	9
18	44	21	30	25	44	6	7	10
18	44	22	30	25	44	6	8	10
18	44	23	30	25	44	6	8	11
25	44	16	30	25	44	6	8	10
25	44	17	30	25	44	6	8	11
25	44	18	30	25	44	7	9	11
25	44	19	30	25	44	7	9	12
25	44	20	30	25	44	8	10	13
25	44	21	30	25	44	8	10	13
25	44	22	30	25	44	8	11	14
25	44	23	30	25	44	9	11	15
30	44	16	30	30	44	9	11	15
30	44	17	30	30	44	9	12	16
30	44	18	30	30	44	10	13	16
30	44	19	30	30	44	10	14	17
30	44	20	30	30	44	11	14	18
30	44	21	30	30	44	11	15	19
30	44	22	30	30	44	12	16	20
30	44	23	30	30	44	12	16	21
30	25	16	30	25	44	13	17	22
30	25	17	30	25	44	14	18	23
30	25	18	30	25	44	14	19	24
30	25	19	30	25	44	15	20	26
30	25	20	30	25	44	16	21	27
30	25	21	30	25	44	17	22	28
30	25	22	30	25	44	18	23	30
30	25	23	30	25	44	18	24	31
30	25	16	30	25	30	19	25	32
30	25	17	30	25	30	20	26	34
30	25	18	30	25	30	21	28	35
30	25	19	30	25	30	22	29	37
30	25	20	30	25	30	23	31	39
30	25	21	30	25	30	25	32	41
30	25	22	30	25	30	26	34	43
30	25	23	30	25	30	27	35	45
30	25	16	30	30	25	27	35	45
30	25	17	30	30	25	29	38	48
30	25	18	30	30	25	30	40	51
30	25	19	30	30	25	32	42	54
30	25	20	30	30	25	34	44	57
30	25	21	30	30	25	35	46	60
30	25	22	30	30	25	37	49	62
30	25	23	30	30	25	39	51	65

Seed Rate Charts

MILLET

Sprockets						Slot Width		
		Derailleur		Box End		Pounds/Acre		
C	D	E	F	G	H	3/16"	1/4"	3/8"
18	44	16	30	25	44	4	6	8
18	44	17	30	25	44	4	6	8
18	44	18	30	25	44	4	7	9
18	44	19	30	25	44	4	7	9
18	44	20	30	25	44	5	7	10
18	44	21	30	25	44	5	8	10
18	44	22	30	25	44	5	8	11
18	44	23	30	25	44	5	8	11
25	44	16	30	25	44	5	8	11
25	44	17	30	25	44	5	9	12
25	44	18	30	25	44	6	9	12
25	44	19	30	25	44	6	10	13
25	44	20	30	25	44	6	10	14
25	44	21	30	25	44	7	11	15
25	44	22	30	25	44	7	11	15
25	44	23	30	25	44	7	12	16
30	44	16	30	30	44	7	12	16
30	44	17	30	30	44	8	12	17
30	44	18	30	30	44	8	13	18
30	44	19	30	30	44	9	14	19
30	44	20	30	30	44	9	14	20
30	44	21	30	30	44	10	15	21
30	44	22	30	30	44	10	16	22
30	44	23	30	30	44	11	17	23
30	25	16	30	25	44	11	17	23
30	25	17	30	25	44	11	18	25
30	25	18	30	25	44	12	19	26
30	25	19	30	25	44	13	20	28
30	25	20	30	25	44	13	21	29
30	25	21	30	25	44	14	22	31
30	25	22	30	25	44	15	23	32
30	25	23	30	25	44	15	24	34
30	25	16	30	25	30	16	25	34
30	25	17	30	25	30	17	26	36
30	25	18	30	25	30	18	28	39
30	25	19	30	25	30	19	30	41
30	25	20	30	25	30	20	31	43
30	25	21	30	25	30	21	33	45
30	25	22	30	25	30	22	34	47
30	25	23	30	25	30	23	36	49
30	25	16	30	30	25	23	36	49
30	25	17	30	30	25	24	38	53
30	25	18	30	30	25	26	40	56
30	25	19	30	30	25	27	43	59
30	25	20	30	30	25	28	45	62
30	25	21	30	30	25	30	47	65
30	25	22	30	30	25	31	49	68
30	25	23	30	30	25	33	52	71

MILO

Sprockets						Slot Width		
		Derailleur		Box End		Pounds/Acre		
C	D	E	F	G	H	3/16"	1/4"	3/8"
18	44	16	30	25	44	4	6	11
18	44	17	30	25	44	5	6	12
18	44	18	30	25	44	5	7	13
18	44	19	30	25	44	5	7	14
18	44	20	30	25	44	5	8	14
18	44	21	30	25	44	6	8	15
18	44	22	30	25	44	6	8	16
18	44	23	30	25	44	6	9	16
25	44	16	30	25	44	6	8	16
25	44	17	30	25	44	6	9	17
25	44	18	30	25	44	7	10	18
25	44	19	30	25	44	7	10	19
25	44	20	30	25	44	8	11	20
25	44	21	30	25	44	8	11	21
25	44	22	30	25	44	8	12	22
25	44	23	30	25	44	9	12	23
30	44	16	30	30	44	9	12	23
30	44	17	30	30	44	9	13	24
30	44	18	30	30	44	10	14	26
30	44	19	30	30	44	10	14	27
30	44	20	30	30	44	11	15	29
30	44	21	30	30	44	11	16	30
30	44	22	30	30	44	12	17	32
30	44	23	30	30	44	12	18	33
30	25	16	30	25	44	13	18	34
30	25	17	30	25	44	13	19	36
30	25	18	30	25	44	14	20	38
30	25	19	30	25	44	15	21	40
30	25	20	30	25	44	16	22	42
30	25	21	30	25	44	17	23	44
30	25	22	30	25	44	17	25	46
30	25	23	30	25	44	18	26	48

Seed Rate Charts

OATS

Sprockets						Slot Width		
		Derailleur		Box End		Pounds/Acre		
C	D	E	F	G	H	1/2"	5/8"	3/4"
30	25	16	30	25	44	15	20	27
30	25	17	30	25	44	16	21	28
30	25	18	30	25	44	17	23	30
30	25	19	30	25	44	18	24	32
30	25	20	30	25	44	19	25	33
30	25	21	30	25	44	20	26	35
30	25	22	30	25	44	21	28	37
30	25	23	30	25	44	22	29	38
30	25	16	30	25	30	22	29	39
30	25	17	30	25	30	23	31	42
30	25	18	30	25	30	25	33	44
30	25	19	30	25	30	26	35	47
30	25	20	30	25	30	28	37	49
30	25	21	30	25	30	29	39	51
30	25	22	30	25	30	30	40	54
30	25	23	30	25	30	32	42	56
30	25	16	30	30	25	32	42	56
30	25	17	30	30	25	34	45	60
30	25	18	30	30	25	36	48	64
30	25	19	30	30	25	38	50	67
30	25	20	30	30	25	40	53	71
30	25	21	30	30	25	42	56	74
30	25	22	30	30	25	44	58	78
30	25	23	30	30	25	46	61	81
25	30	16	30	44	18	45	60	80
25	30	17	30	44	18	48	64	85
25	30	18	30	44	18	51	67	90
25	30	19	30	44	18	53	71	95
25	30	20	30	44	18	56	75	100
25	30	21	30	44	18	59	79	105
25	30	22	30	44	18	62	82	110
25	30	23	30	44	18	65	86	115
30	25	16	30	44	18	65	86	115
30	25	17	30	44	18	69	92	122
30	25	18	30	44	18	73	97	129
30	25	19	30	44	18	77	102	137
30	25	20	30	44	18	81	108	144
30	25	21	30	44	18	85	113	151
30	25	22	30	44	18	89	119	158
30	25	23	30	44	18	93	124	165

PINTO BEANS

Sprockets						Slot Width		
		Derailleur		Box End		Pounds/Acre		
C	D	E	F	G	H	1/2"	5/8"	3/4"
30	25	16	30	25	44	20	27	32
30	25	17	30	25	44	21	28	34
30	25	18	30	25	44	22	30	36
30	25	19	30	25	44	24	31	38
30	25	20	30	25	44	25	33	40
30	25	21	30	25	44	26	35	42
30	25	22	30	25	44	27	36	44
30	25	23	30	25	44	29	38	46
30	25	16	30	25	30	29	39	46
30	25	17	30	25	30	31	41	49
30	25	18	30	25	30	33	44	52
30	25	19	30	25	30	35	46	55
30	25	20	30	25	30	37	49	58
30	25	21	30	25	30	38	51	61
30	25	22	30	25	30	40	53	64
30	25	23	30	25	30	42	56	67
30	25	16	30	30	25	42	56	67
30	25	17	30	30	25	45	60	71
30	25	18	30	30	25	47	63	75
30	25	19	30	30	25	50	67	79
30	25	20	30	30	25	53	70	84
30	25	21	30	30	25	55	74	88
30	25	22	30	30	25	58	77	92
30	25	23	30	30	25	61	81	96
25	30	16	30	44	18	60	79	95
25	30	17	30	44	18	63	84	101
25	30	18	30	44	18	67	89	107
25	30	19	30	44	18	71	94	112
25	30	20	30	44	18	75	99	118
25	30	21	30	44	18	78	104	124
25	30	22	30	44	18	82	109	130
25	30	23	30	44	18	86	114	136
30	25	16	30	44	18	86	114	136
30	25	17	30	44	18	91	121	145
30	25	18	30	44	18	97	128	153
30	25	19	30	44	18	102	135	162
30	25	20	30	44	18	107	143	170
30	25	21	30	44	18	113	150	179
30	25	22	30	44	18	118	157	187
30	25	23	30	44	18	124	164	196
44	25	16	30	44	18	126	167	200
44	25	17	30	44	18	134	178	212
44	25	18	30	44	18	142	188	225
44	25	19	30	44	18	150	199	237
44	25	20	30	44	18	158	209	250
44	25	21	30	44	18	165	220	262
44	25	22	30	44	18	173	230	275
44	25	23	30	44	18	181	241	287

Seed Rate Charts

RICE

Sprockets						Slot Width		
		Derailleur		Box End		Pounds/Acre		
C	D	E	F	G	H	1/2"	5/8"	3/4"
30	25	16	30	25	44	27	34	40
30	25	17	30	25	44	29	36	42
30	25	18	30	25	44	31	38	45
30	25	19	30	25	44	32	40	47
30	25	20	30	25	44	34	43	50
30	25	21	30	25	44	36	45	52
30	25	22	30	25	44	37	47	54
30	25	23	30	25	44	39	49	57
30	25	16	30	25	30	40	50	58
30	25	17	30	25	30	42	53	62
30	25	18	30	25	30	45	56	65
30	25	19	30	25	30	47	59	69
30	25	20	30	25	30	50	63	73
30	25	21	30	25	30	52	66	76
30	25	22	30	25	30	55	69	80
30	25	23	30	25	30	57	72	84
30	25	16	30	30	25	57	72	84
30	25	17	30	30	25	61	77	89
30	25	18	30	30	25	65	81	94
30	25	19	30	30	25	68	86	99
30	25	20	30	30	25	72	90	105
30	25	21	30	30	25	75	95	110
30	25	22	30	30	25	79	99	115
30	25	23	30	30	25	83	104	120
25	30	16	30	44	18	81	102	118
25	30	17	30	44	18	86	108	126
25	30	18	30	44	18	91	115	133
25	30	19	30	44	18	97	121	141
25	30	20	30	44	18	102	127	148
25	30	21	30	44	18	107	134	155
25	30	22	30	44	18	112	140	163
25	30	23	30	44	18	117	146	170
30	25	16	30	44	18	117	146	170
30	25	17	30	44	18	125	155	181
30	25	18	30	44	18	131	164	191
30	25	19	30	44	18	139	174	202
30	25	20	30	44	18	147	183	213
30	25	21	30	44	18	154	192	224
30	25	22	30	44	18	161	201	234
30	25	23	30	44	18	168	210	245

RYE

Sprockets						Slot Width		
		Derailleur		Box End		Pounds/Acre		
C	D	E	F	G	H	1/2"	5/8"	3/4"
30	44	16	30	30	44	27	34	44
30	44	17	30	30	44	28	36	46
30	44	18	30	30	44	30	38	49
30	44	19	30	30	44	32	40	52
30	44	20	30	30	44	33	43	55
30	44	21	30	30	44	35	45	57
30	44	22	30	30	44	36	47	60
30	44	23	30	30	44	38	49	63
30	25	16	30	25	44	39	50	64
30	25	17	30	25	44	41	53	68
30	25	18	30	25	44	44	56	72
30	25	19	30	25	44	46	59	76
30	25	20	30	25	44	49	62	80
30	25	21	30	25	44	51	66	84
30	25	22	30	25	44	54	69	88
30	25	23	30	25	44	56	72	92
30	25	16	30	25	30	57	73	94
30	25	17	30	25	30	61	78	100
30	25	18	30	25	30	64	82	106
30	25	19	30	25	30	68	87	112
30	25	20	30	25	30	71	92	117
30	25	21	30	25	30	75	96	123
30	25	22	30	25	30	78	101	129
30	25	23	30	25	30	82	105	135
30	30	16	30	30	25	82	105	135
30	30	17	30	30	25	87	112	144
30	30	18	30	30	25	92	119	152
30	30	19	30	30	25	98	125	161
30	30	20	30	30	25	103	132	169
30	30	21	30	30	25	108	138	178
30	30	22	30	30	25	113	145	186
30	30	23	30	30	25	118	152	195

Seed Rate Charts

SOYBEANS

Sprockets						Slot Width			
		Derailleur		Box End		Pounds/Acre			
C	**D**	**E**	**F**	**G**	**H**	**3/8"**	**1/2"**	**5/8"**	**3/4"**
30	25	16	30	25	44	18	26	34	43
30	25	17	30	25	44	19	27	37	45
30	25	18	30	25	44	20	29	39	48
30	25	19	30	25	44	21	31	41	51
30	25	20	30	25	44	22	32	43	53
30	25	21	30	25	44	23	34	45	56
30	25	22	30	25	44	24	36	47	59
30	25	23	30	25	44	25	37	50	61
30	25	16	30	25	30	26	38	51	63
30	25	17	30	25	30	27	40	54	67
30	25	18	30	25	30	29	43	57	71
30	25	19	30	25	30	31	45	60	75
30	25	20	30	25	30	32	47	63	78
30	25	21	30	25	30	34	50	66	82
30	25	22	30	25	30	35	52	70	86
30	25	23	30	25	30	37	55	73	90
30	25	16	30	30	25	37	55	73	90
30	25	17	30	30	25	39	58	77	96
30	25	18	30	30	25	42	61	82	102
30	25	19	30	30	25	44	65	87	107
30	25	20	30	30	25	46	68	91	113
30	25	21	30	30	25	49	72	96	119
30	25	22	30	30	25	51	75	100	124
30	25	23	30	30	25	53	79	105	130
25	30	16	30	44	18	52	77	103	128
25	30	17	30	44	18	56	82	109	136
25	30	18	30	44	18	59	87	116	144
25	30	19	30	44	18	62	92	122	152
25	30	20	30	44	18	65	97	129	160
25	30	21	30	44	18	69	101	135	168
25	30	22	30	44	18	72	106	142	176
25	30	23	30	44	18	75	111	148	184
30	25	16	30	44	18	75	111	148	184
30	25	17	30	44	18	80	118	158	196
30	25	18	30	44	18	84	124	166	206
30	25	19	30	44	18	89	132	176	219
30	25	20	30	44	18	94	139	185	230
30	25	21	30	44	18	99	146	195	242
30	25	22	30	44	18	103	153	204	253
30	25	23	30	44	18	108	160	213	265

SUNFLOWERS

Sprockets						Slot Width		
		Derailleur		Box End		Pounds/Acre		
C	**D**	**E**	**F**	**G**	**H**	**1/2"**	**5/8"**	**3/4"**
18	44	16	30	25	44	5	7	8
18	44	17	30	25	44	5	7	9
18	44	18	30	25	44	6	8	9
18	44	19	30	25	44	6	8	10
18	44	20	30	25	44	6	8	10
18	44	21	30	25	44	7	9	11
18	44	22	30	25	44	7	9	11
18	44	23	30	25	44	7	10	12
25	44	16	30	25	44	7	9	11
25	44	17	30	25	44	8	10	12
25	44	18	30	25	44	8	11	13
25	44	19	30	25	44	9	11	13
25	44	20	30	25	44	9	12	14
25	44	21	30	25	44	9	12	15
25	44	22	30	25	44	10	13	16
25	44	23	30	25	44	10	14	16
30	44	16	30	30	44	10	14	16
30	44	17	30	30	44	11	14	17
30	44	18	30	30	44	12	15	18
30	44	19	30	30	44	12	16	19
30	44	20	30	30	44	13	17	20
30	44	21	30	30	44	14	18	21
30	44	22	30	30	44	14	19	22
30	44	23	30	30	44	15	20	23
30	25	16	30	25	44	15	20	24
30	25	17	30	25	44	16	21	25
30	25	18	30	25	44	17	22	27
30	25	19	30	25	44	18	24	28
30	25	20	30	25	44	19	25	30
30	25	21	30	25	44	20	26	31
30	25	22	30	25	44	21	27	33
30	25	23	30	25	44	22	29	34
30	25	16	30	25	30	22	29	35
30	25	17	30	25	30	24	31	37
30	25	18	30	25	30	25	33	39
30	25	19	30	25	30	26	35	42
30	25	20	30	25	30	28	37	44
30	25	21	30	25	30	29	38	46
30	25	22	30	25	30	31	40	48
30	25	23	30	25	30	32	42	50

Seed Rate Charts

WHEAT

		Sprockets				Slot Width		
		Derailleur		Box End		Pounds/Acre		
C	**D**	**E**	**F**	**G**	**H**	**1/2"**	**5/8"**	**3/4"**
25	44	16	30	25	44	21	26	31
25	44	17	30	25	44	22	27	33
25	44	18	30	25	44	23	29	35
25	44	19	30	25	44	25	31	37
25	44	20	30	25	44	26	32	39
25	44	21	30	25	44	27	34	41
25	44	22	30	25	44	28	36	43
25	44	23	30	25	44	30	37	45
30	44	16	30	30	44	30	37	45
30	44	17	30	30	44	32	40	47
30	44	18	30	30	44	33	42	50
30	44	19	30	30	44	35	44	53
30	44	20	30	30	44	37	47	56
30	44	21	30	30	44	39	49	59
30	44	22	30	30	44	41	51	61
30	44	23	30	30	44	43	53	64
30	25	16	30	25	44	44	55	65
30	25	17	30	25	44	46	58	70
30	25	18	30	25	44	49	61	74
30	25	19	30	25	44	52	65	78
30	25	20	30	25	44	55	68	82
30	25	21	30	25	44	57	72	86
30	25	22	30	25	44	60	75	90
30	25	23	30	25	44	63	78	94
30	25	16	30	25	30	64	80	96
30	25	17	30	25	30	68	85	102
30	25	18	30	25	30	72	90	108
30	25	19	30	25	30	76	95	114
30	25	20	30	25	30	80	100	120
30	25	21	30	25	30	84	105	126
30	25	22	30	25	30	88	110	132
30	25	23	30	25	30	92	115	138
30	25	16	30	30	25	92	115	138
30	25	17	30	30	25	98	122	147
30	25	18	30	30	25	104	130	156
30	25	19	30	30	25	109	137	164
30	25	20	30	30	25	115	144	173
30	25	21	30	30	25	121	151	182
30	25	22	30	30	25	127	158	190
30	25	23	30	30	25	133	166	199

Sprockets

18 T	#954131
25 T	#935098
30 T	#935106
44 T	#954362

Notes

4740 Center Drive

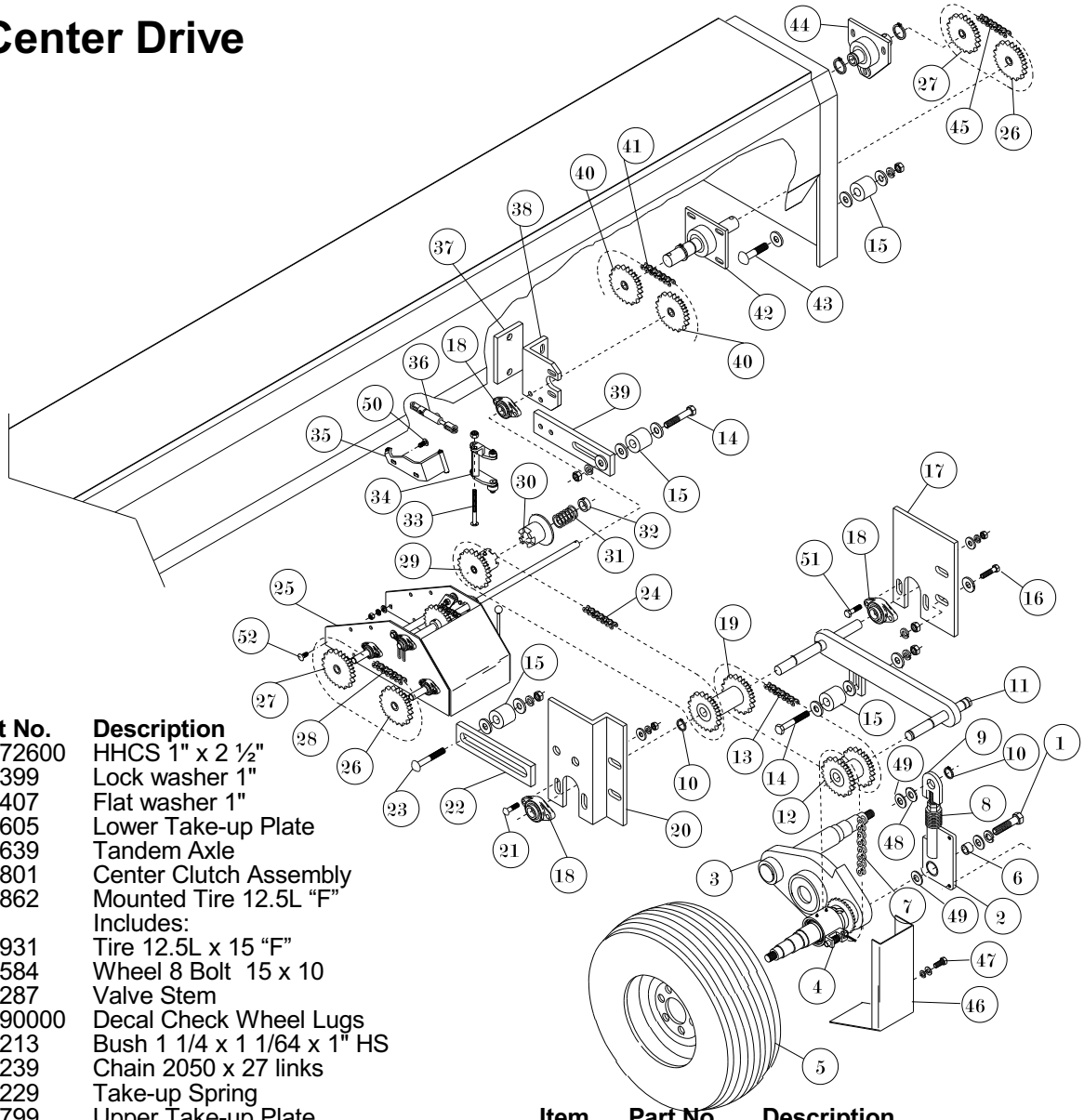

Item	Part No.	Description
1	01172600	HHCS 1" x 2 ½"
	330399	Lock washer 1"
	330407	Flat washer 1"
2	962605	Lower Take-up Plate
3	962639	Tandem Axle
4	864801	Center Clutch Assembly
5	032862	Mounted Tire 12.5L “F” Includes:
	530931	Tire 12.5L x 15 “F”
	530584	Wheel 8 Bolt 15 x 10
	530287	Valve Stem
	02990000	Decal Check Wheel Lugs
6	600213	Bush 1 1/4 x 1 1/64 x 1" HS
7	431239	Chain 2050 x 27 links
8	502229	Take-up Spring
9	960799	Upper Take-up Plate
10	605766	Retaining ring 1" External
11	962597	Center Crossover Arm
12	864785	Sprocket Assembly Short 2050 18T / 20T
13	431569	Chain 2050 x 33 links
14	334946	HHCS 1/2" x 3"
	330134	Hex nut ½"
	330142	Lock washer ½”
	330159	Flat washer ½"
15	571273	Nylon Idler
16	335448	HHCS 5/16" x 1 ½"
	330811	Hex nut 5/16"
	330845	Lock washer 5/16"
	330852	Flat washer 5/16"
17	216275	Center Bearing Plate
18	03001500	Bearing 1" Flange Mount
19	864793	Sprocket Assembly Long 2050 18T / 20T
20	221853	Center Bearing Plate (Bent)
21	01047000	Carriage Bolt 5/16" x 1"
	330811	Hex nut 5/16"
	330845	Lock washer 5/16"
	330852	Flat washer 5/16"
22	935783	Idler Plate

Item	Part No.	Description
123	335323	Carriage Bolt ½" x 3"
	330134	Hex nut ½"
	330142	Lock washer ½"
	330159	Flat washer ½"
24	431544	Chain 2050 x 39 links
25	865105	Gearbox Assembly
26	935098	Sprocket 2050 25T 1" Bore
27	935106	Sprocket 2050 30T 1" Bore
28	431239	Chain 2050 x 27 links
29	863803	Clutch Sprocket Assembly 25T
	863795	Clutch Sprocket Assembly 20T
	863787	Clutch Sprocket Assembly 18T
30	860825	Clutch Throwout Assembly
31	501031	Spring
32	06409700	Set Collar 1"
33	335364	Carriage Bolt ½" x 6"
	331363	Nylock hex nut ½"
34	870139	Clutch Lever Assembly
35	963611	Clutch Bracket Mount
36	471854	Cylinder 1" x 2"
37	217000	Back-up Plate
38	216994	Drive Support Plate
39	184952	Idler Plate

4740 Center Drive

Item	Part No.	Description
40	935080	Sprocket 2050 20T 1" Bore
41	432914	Chain 2050 x 21 links
42	865089	Drive Bracket Assembly
43	333310	Carriage Bolt ½" x 3 ½"
	330134	Hex nut ½"
	330142	Lock washer ½"
	330159	Flat washer ½"
44	865758	Bearing Bracket Assembly
45	432690	Chain 2050 x 29 links
46	962613	Chain Guard
47	01010800	HHCS 5/16" x 1"
	330852	Flat Washer 5/16"
	330845	Lock Washer 5/16"
48	332569	Machine Bushing 1 7/8" x 1 1/4" x 10ga
49	337709	Machine Bushing 1 7/8" x 1 1/4" x 18ga
50	01136100	Carriage Bolt ½" x 1 1/4"
	330134	Hex nut ½"
	330142	Lock washer ½"
	330159	Flat washer ½"
51	01011600	HHCS 5/16" x 1 1/4"
	330811	Hex nut 5/16"
	330845	Lock washer 5/16"
	330852	Flat washer 5/16"
52	01212000	Carriage Bolt ½" x 2"
	330134	Hex nut ½"
	330142	Lock washer ½"
	330159	Flat washer ½"

Center Drive Assembly Dimensions

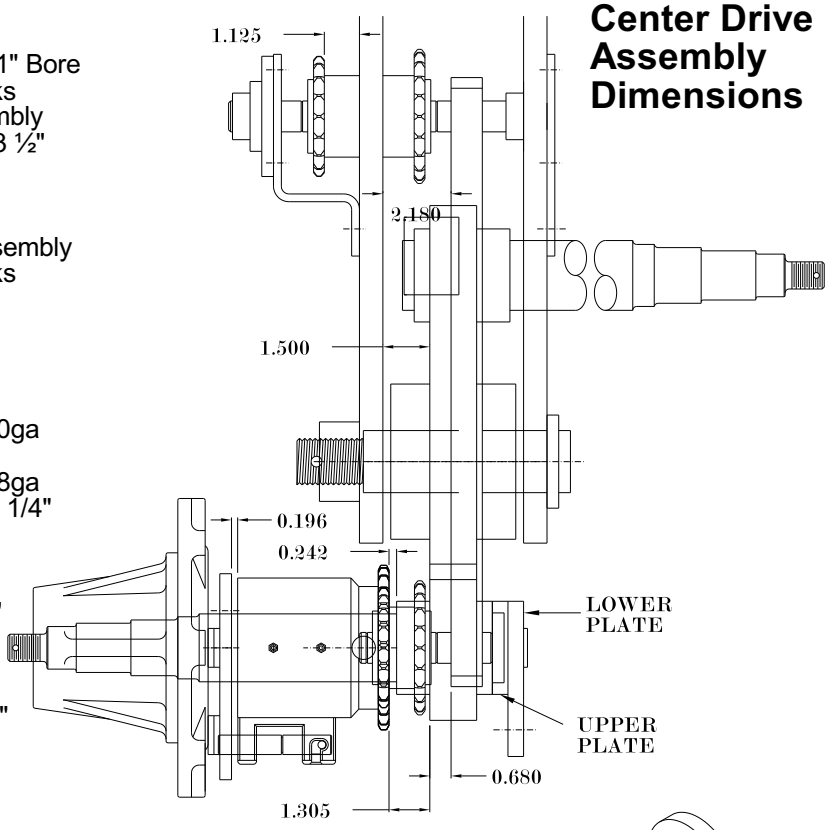

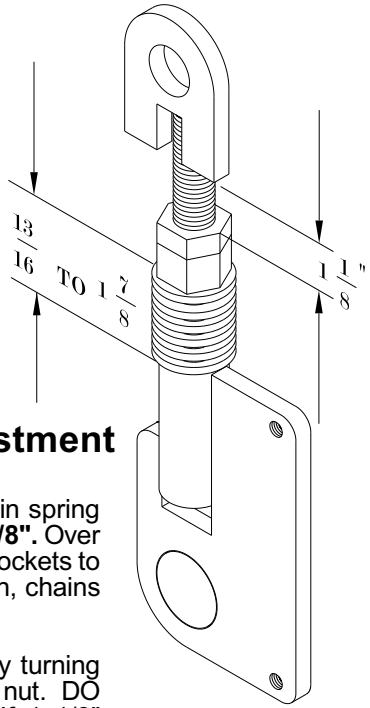

Center Drive Take-up Adjustment

When adjusting, maintain spring length at **1 13/16" to 1 7/8".** Over tightening will cause sprockets to twist. If not tight enough, chains will slip.

Adjust take-up spring by turning 3/4 hex nut and 3/4 jam nut. DO NOT exceed **1 1/8".** If 1 1/8" measurement is exceeded, remove chain links as necessary. Be sure to retighten 3/4 jam nut.

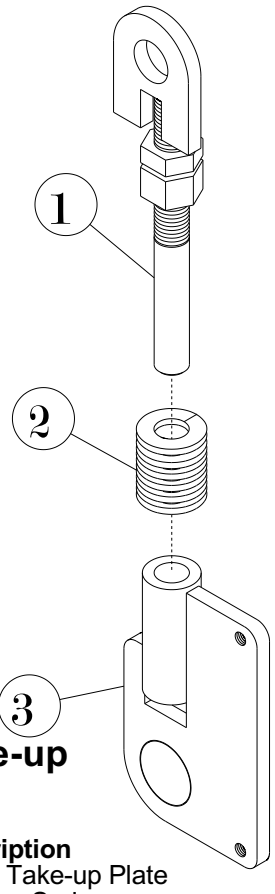

Center Drive Take-up Detail

Item	Part No.	Description
1	960799	Upper Take-up Plate
2	502229	Take-up Spring
3	962605	Lower Take-up Plate

4740 Wing Drive - Left

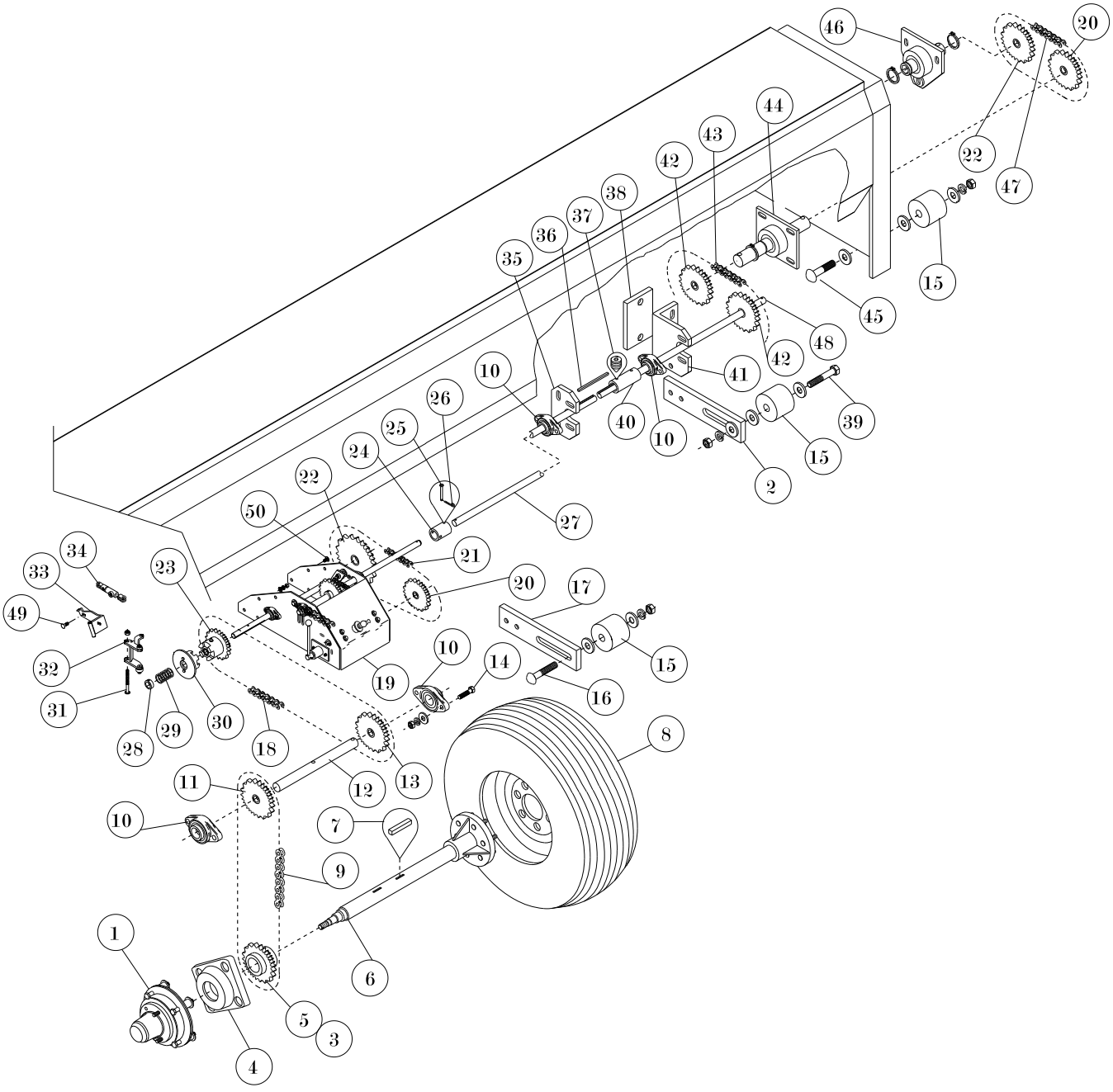

4740 Wing Drive - Left

Item	Part No.	Description
1	870196	Clutch Assembly
2	184952	Idler Plate
3	334516	Set Screw 1/4-28 x 1/4" Cone Pt
4	403279	Bearing 2" 4 Bolt Flange
	403287	Insert of #403279
5	954370	Hub Drive Sprocket 2050 18T
6	961862	Wing Wheel Spindle
7	310656	Key 3/16" x 1 ½"
8	815175	Mounted Tire 11L 8 Ply
	Includes:	
	530329	Tire 11L x 15 8 Ply
	530147	Wheel 6 Bolt 15 x 10
	530287	Valve Stem
	02990000	Decal Check Wheel Lugs
9	431544	Chain 2050 x 39 links
10	03001500	Bearing 1" Flange Mount
11	954131	Sprocket 2050 18T 1" Bore
12	309781	Crossover Shaft 1"
13	954131	Sprocket 2050 18T 1" Bore
	935098	Sprocket 2050 25T 1" Bore
14	335448	HHCS 5/16" x 1 ½"
	330811	Hex nut 5/16"
	330845	Lock washer 5/16"
	330852	Flat washer 5/16"
15	571273	Nylon Idler
16	335323	Carriage Bolt ½" x 3"
	330134	Hex nut ½"
	330142	Lock washer ½"
	330159	Flat washer ½"
17	218750	Idler Plate
18	431841	Chain 2050 x 37 links
19	869693	Gearbox Assembly
20	935098	Sprocket 2050 25T 1" Bore
21	431239	Chain 2050 x 27 links
22	935106	Sprocket 2050 30T 1" Bore
23	863803	Clutch Sprocket 25T
	863795	Clutch Sprocket 20T
	863787	Clutch Sprocket 18T
24	150334	Adapter Sleeve
25	335349	Clevis Pin 1/4" x 1 5/8"
26	337071	Cotter Pin 3/32" x ½"
27	310011	Drive Shaft

Item	Part No.	Description
28	06409700	Set Collar 1"
29	501031	Spring
30	860825	Clutch Throwout Assembly
31	335364	Carriage Bolt ½" x 6"
	331363	Nylock hex nut ½"
32	870121	Clutch Lever Assembly
33	963603	Clutch Bracket Mount
34	471854	Cylinder 1" x 2"
35	217018	Drive Support Plate
36	605683	Key 1/4" x 4 ½"
37	01139500	Set Screw 3/8" Star Cup
38	217000	Back-up Plate
39	334300	HHCS 1/2" x 3 ½"
	330159	Flat washer ½"
	330142	Lock washer ½"
	330134	Hex nut ½"
40	150342	Connector Spool
41	216994	Drive Support Plate
42	935080	Sprocket 2050 20T 1" Bore
43	432914	Chain 2050 x 21 links
44	865089	Drive Bracket Assembly
45	333310	Carriage Bolt ½" x 3 ½"
	330134	Hex nut ½"
	330159	Flat washer ½"
	330142	Lock washer ½"
46	865758	Bearing Bracket Assembly
47	432690	Chain 2050 x 29 links
48	310912	Drive Shaft
49	01136100	Carriage Bolt ½" x 1 1/4"
	330134	Hex nut ½"
	330159	Flat washer ½"
	330142	Lock washer ½"
50	0121200	Carriage Bolt ½" x 2"
	330134	Hex nut ½"
	330159	Flat washer ½"
	330142	Lock washer ½"

4740 Wing Drive - Right

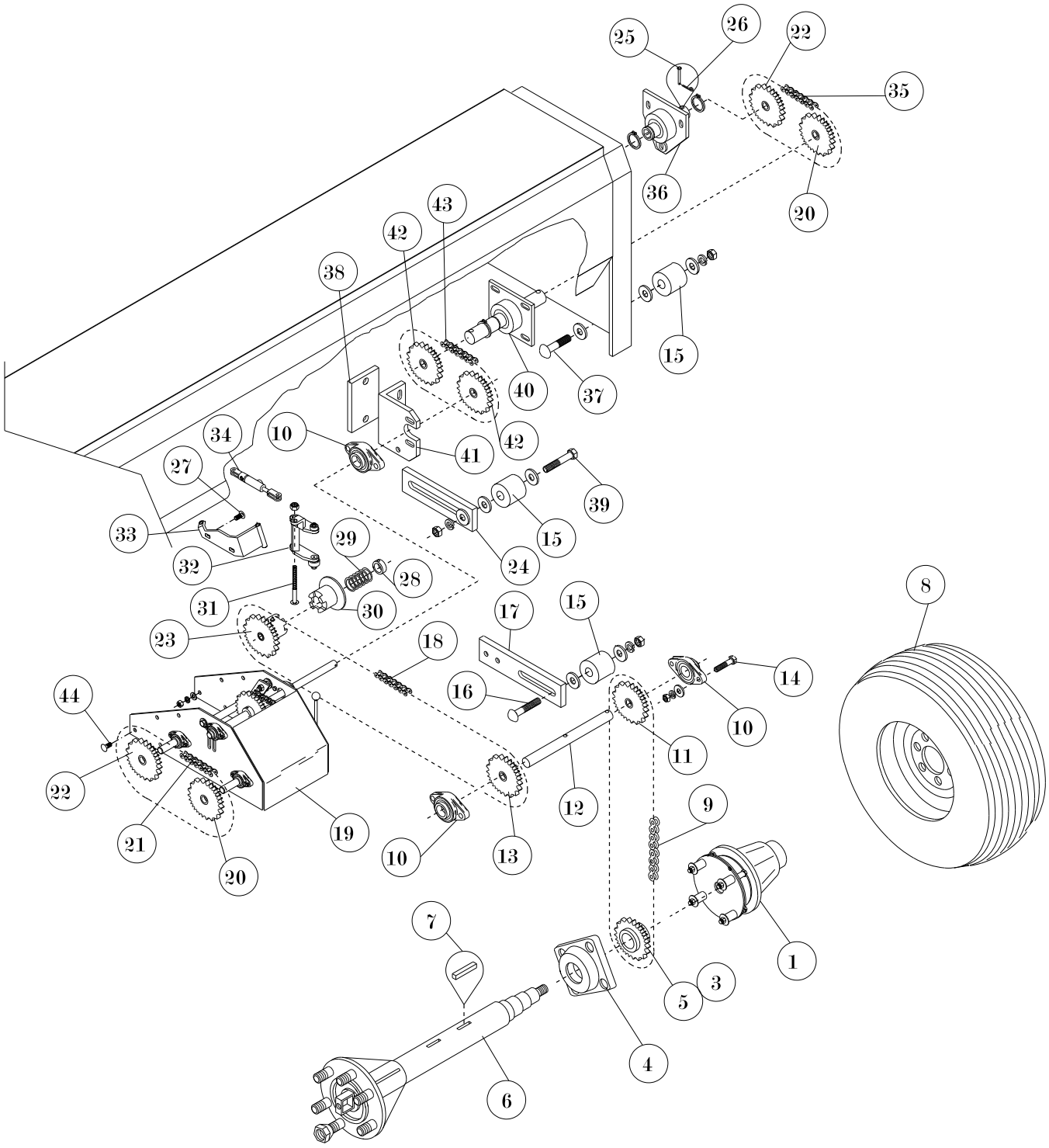

4740 Wing Drive - Right

Item	Part No.	Description
1	870196	Clutch Assembly
2		
3	334516	Set Screw 1/4-28 x 1/4" Cone Pt
4	403279	Bearing 2" 4 Bolt Flange
	403287	Insert for #403279
5	954370	Hub Drive Sprocket 2050 18T
6	961862	Wing Wheel Spindle
7	310656	Key 3/16" x 1 1/2"
8	815175	Mounted Tire 11L 8 Ply
	Includes:	
	530329	Tire 11L x 15 8 Ply
	530147	Wheel 6 Bolt 15 x 10
	530287	Valve Stem
	02990000	Decal Check Wheel Lugs
9	431544	Chain 2050 x 39 links
10	03001500	Bearing 1" Flange Mount
11	954131	Sprocket 2050 18T 1" Bore
12	309781	Crossover Shaft 1"
13	954131	Sprocket 2050 18T 1" Bore
	935098	Sprocket 2050 25T 1" Bore
14	335448	HHCS 5/16" x 1 1/2"
	330811	Hex nut 5/16"
	330845	Lock washer 5/16"
	330852	Flat washer 5/16"
15	571273	Nylon Idler
16	335323	Carriage Bolt 1/2" x 3"
	330134	Hex nut 1/2"
	330142	Lock washer 1/2"
	330159	Flat washer 1/2"
17	218750	Idler Plate
18	431841	Chain 2050 x 37 links
19	865105	Gearbox Assembly
20	935098	Sprocket 2050 25T 1" Bore
21	431239	Chain 2050 x 27 links
22	935106	Sprocket 2050 30T 1" Bore
23	863803	Clutch Sprocket 25T
	863795	Clutch Sprocket 20T
	863787	Clutch Sprocket 18T

Item	Part No.	Description
24	184952	Idler Plate
25	335349	Clevis Pin 1/4" x 1 5/8"
26	337071	Cotter Pin 3/32" x 1/2"
27	01136100	Carriage Bolt ½" x 1 1/4"
	330159	Flat washer ½"
	330142	Lock washer ½"
	330134	Hex nut ½"
28	06409700	Set Collar 1"
29	501031	Spring
30	860825	Clutch Throwout Assembly
31	335364	Carriage Bolt ½" x 6"
	331363	Nylock hex nut 1/2"
32	870139	Clutch Lever Assembly
33	963611	Clutch Bracket Mount
34	471854	Cylinder 1" x 2"
35	432690	Chain 2050 x 29 Links
36	865758	Bearing Bracket Assembly
37	333310	Carriage Bolt ½" x 3 ½"
	330134	Hex nut ½"
	330159	Flat washer ½"
	330142	Lock washer ½"
38	217000	Back-up Plate
39	334300	HHCS 1/2" x 3 1/2"
	330159	Flat washer 1/2"
	330142	Lock washer 1/2"
	330134	Hex nut 1/2"
40	865089	Drive Bracket Assembly
41	216994	Drive Support Plate
42	935080	Sprocket 2050 20T 1" Bore
43	432914	Chain 2050 x 21 links
44	962647	Wing Wheel Spindle
45	330092	HHCS 1/2" x 4"
	331363	Hex nylock nut 1/2"
46	145623	Spindle Bushing
47	01212000	Carriage Bolt ½" x 2"
	330159	Flat washer ½"
	330142	Lock washer ½"
	330134	Hex nut 1/2"

4740 Gearbox - Left
#869693

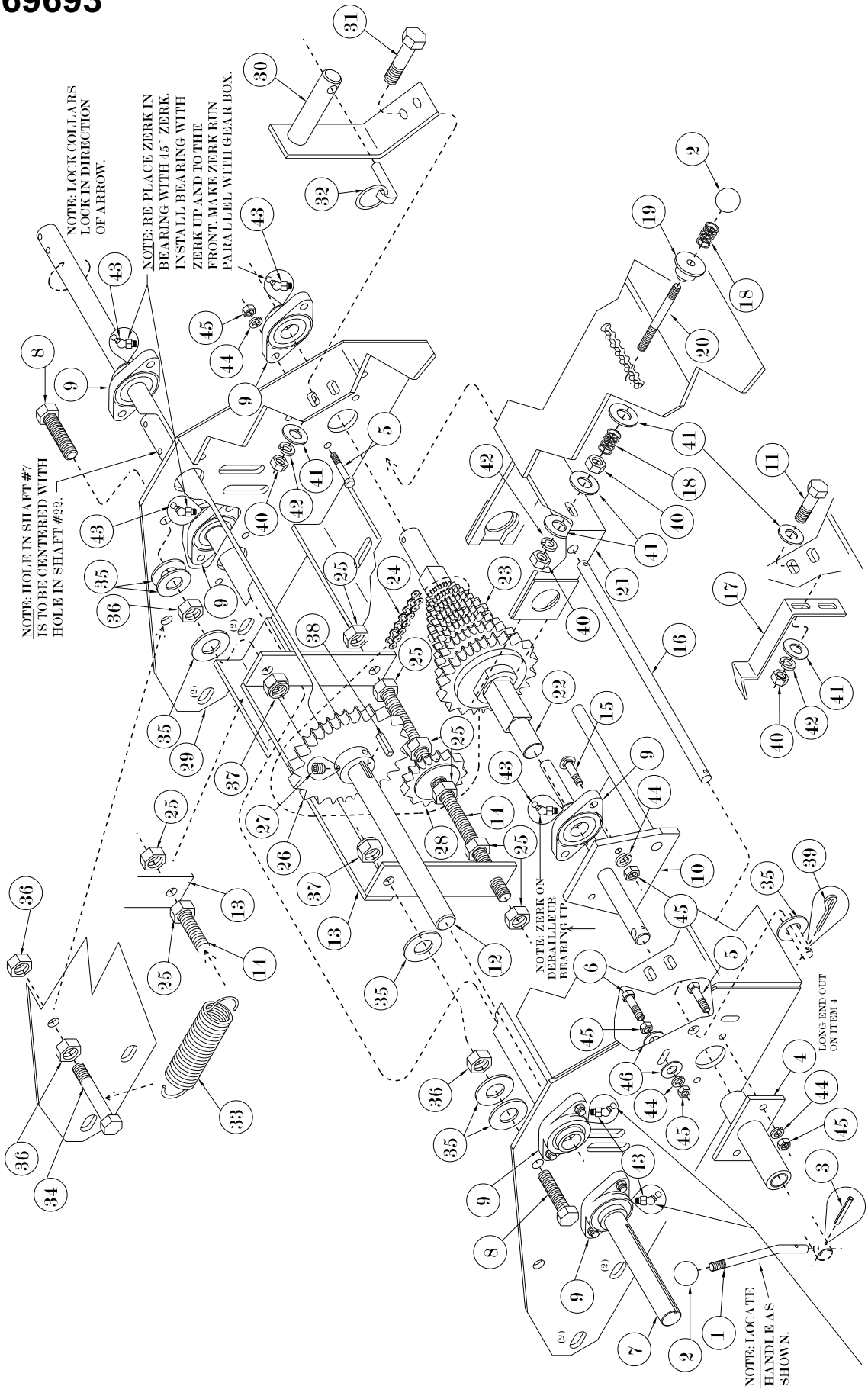

4740 Gearbox - Left

Item	Part No.	Description
1	310938	Handle Shaft
2	604611	Knob Black Plastic Ball
3	334581	Roll Pin 5/32" x 7/8"
4	860908	Derailleur Clutch Mount Assy
5	01010800	HHCS 5/16" x 1" Gr 5
	330845	Lock washer 5/16"
	330811	Hex nut 5/16"
6	02300200	HHCS 5/16" x 2" Gr 5
	330852	Flat washer 5/16"
	330845	Lock washer 5/16"
	330811	Hex nut 5/16"
7	309047	Clutch Shaft
8	337212	Tap Bolt 1/2" x 2" Gr 5
	330159	Flat washer 1/2"
	330134	Hex nut 1/2"
	331363	Hex nylock 1/2"
9	03001500	Bearing 1" Flange Mount
10	954339	Derailleur Bracket
11	01017300	HHCS 3/8" x 1" Gr 5
	330043	Lock washer 3/8"
	330894	Flat washer 3/8"
	330035	Hex nut 3/8"
12	309039	Box End Drive Shaft
13	954941	Idler Arm
14	309112	Idler Arm All Thread Shaft
15	01261700	Carriage Bolt 5/16" x 1 1/2"
	330845	Lock washer 5/16"
	330811	Hex nut 5/16"
16	309070	Gearbox Shaft
17	211896	Derailleur Spring Catch Plate
18	502161	Knob Spring
19	309138	Shift Lock
20	309104	Adjustment Handle Shaft
21	954347	Sprocket Cluster Bracket
22	309054	Cluster Shaft
23	432708	Sprocket Cluster
24	432542	Chain #40 x 64 Pitches Complete
25	330571	Hex Nut 5/8"
26	954149	Sprocket #40 30T w/1" Bore
27	334516	Set Screw 1/4-28" x 1/4" Cone Pt
28	430603	Idler Sprocket 17T
29	957738	Gearbox Weldment
30	958249	Sprocket Carrier
31	01158500	HHCS 3/8" x 1 1/4"
32	330456	Klik Pin 7/16"
33	500173	Idler Spring
34	335422	HHCS 1/2" x 2 1/2" Gr 5
35	330159	Flat washer 1/2"
36	330134	Hex nut 1/2"
37	331363	Hex nylock 1/2"
38	10490100	Key 1/4" x 1 1/4"
39	330936	Cotter Pin 1/8" x 1"
40	330035	Hex nut 3/8"
41	330894	Flat washer 3/8"
42	330043	Lock washer 3/8"
43	01162700	Zerk 1/4-28" 45°
44	330845	Lock washer 5/16"
45	330811	Hex nut 5/16"
46	330852	Flat washer 5/16"

Clutch Lever Assembly - Left

#870139

Item	Part No.	Description
1	337311	Screw 3/8" x 1 3/4" Flat Head Socket
2	963637	Clutch Lever Left
3	337063	Nylon Washer 1/2" ID x 11/16" OD x 1/32"
4	309641	Clutch Lever Bushing
5	149385	Bushing
6	330894	Flat washer 3/8"
7	330837	Nylock Hex Nut 3/8"

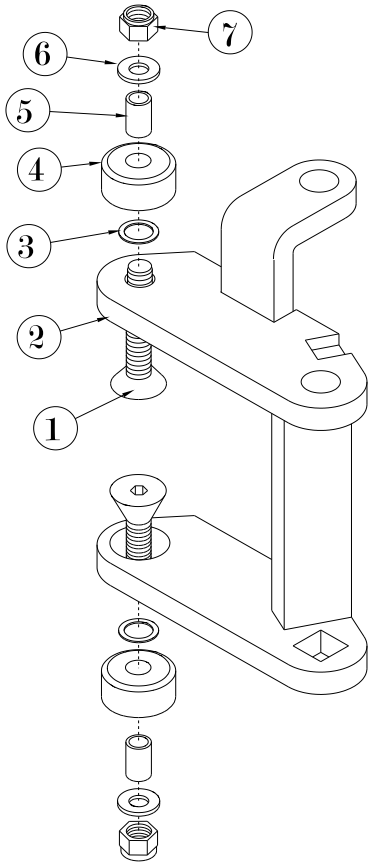

4740 Gearbox - Right
#865105

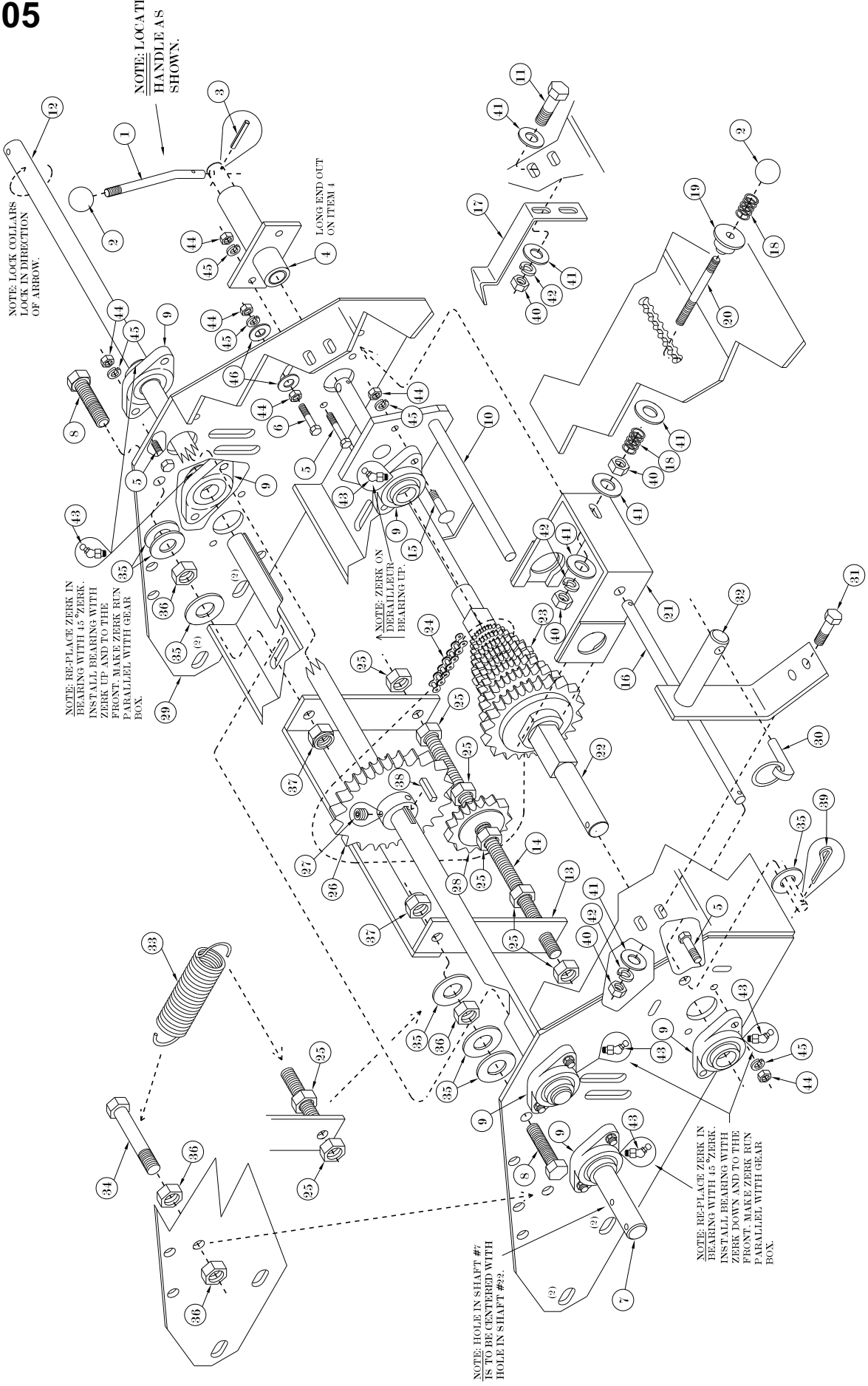

4740 Gearbox - Right

Item	Part No.	Description
1	310938	Handle Shaft
2	604611	Knob Black Plastic Ball
3	334581	Roll Pin 5/32" x 7/8"
4	860908	Derailleur Clutch Mount Assy
5	01010800	HHCS 5/16" x 1" Gr 5
	330845	Lock washer 5/16"
	330811	Hex nut 5/16"
6	02300200	HHCS 5/16" x 2" Gr 5
	330852	Flat washer 5/16"
	330845	Lock washer 5/16"
	330811	Hex nut 5/16"
7	309047	Clutch Shaft
8	337212	Tap Bolt ½" x 2" Gr 5
	330159	Flat washer ½"
	330134	Hex nut ½"
	331363	Hex nylock ½"
9	03001500	Bearing 1" Flange Mount
10	954339	Derailleur Bracket
11	01017300	HHCS 3/8" x 1" Gr 5
	330043	Lock washer 3/8"
	330894	Flat washer 3/8"
	330035	Hex nut 3/8"
12	309039	Box End Drive Shaft
13	954941	Idler Arm
14	309112	Idler Arm All Thread Shaft
15	01261700	Carriage Bolt 5/16" x 1½"
	330845	Lock washer 5/16"
	330811	Hex nut 5/16"
16	309070	Gearbox Shaft
17	211896	Derailleur Spring Catch Plate
18	502161	Knob Spring
19	309138	Shift Lock
20	309104	Adjustment Handle Shaft
21	954347	Sprocket Cluster Bracket
22	309054	Cluster Shaft
23	432708	Sprocket Cluster
24	432542	Chain #40 x 64 Pitches Complete
25	330571	Hex Nut 5/8"
26	954149	Sprocket #40 30T w/1" Bore
27	334516	Set Screw 1/4-28" x 1/4" Cone Pt
28	430603	Idler Sprocket 17T
29	957738	Gearbox Weldment
30	330456	Klik Pin 7/16"
31	01158500	HHCS 3/8" x 1 1/4"
32	958249	Sprocket Carrier
33	500173	Idler Spring
34	335422	HHCS ½" x 2½" Gr 5
35	330159	Flat washer ½"
36	330134	Hex nut ½"
37	331363	Hex nylock ½"
38	10490100	Key 1/4" x 1 1/4"
39	330936	Cotter Pin 1/8" x 1"
40	330035	Hex nut 3/8"
41	330894	Flat washer 3/8"
42	330043	Lock washer 3/8"
43	01162700	Zerk 1/4-28" 45°
44	330811	Hex nut 5/16"
45	330845	Lock washer 5/16"
46	330852	Flat washer 5/16"

Clutch Lever Assembly - Right

#870121

Item	Part No.	Description
1	337311	Screw 3/8" x 1 3/4" Flat Head Socket
2	963629	Clutch Lever Right
3	337063	Nylon Washer ½" ID x 11/16" OD x 1/32"
4	309641	Clutch Lever Bushing
5	149385	Bushing
6	330894	Flat washer 3/8"
7	330837	Nylock Hex Nut 3/8"

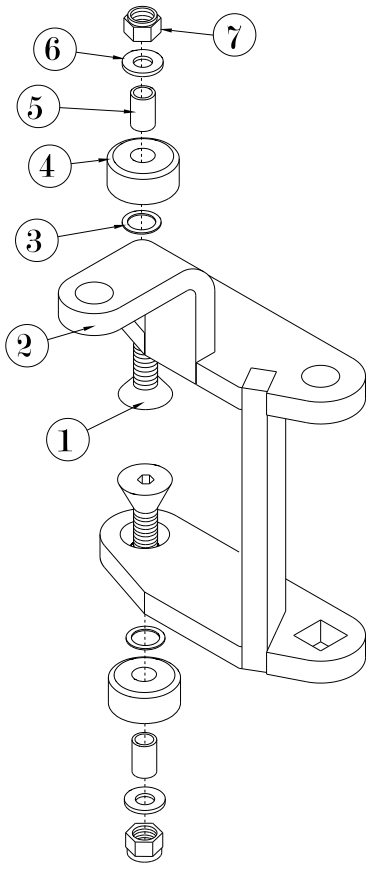

Center Section

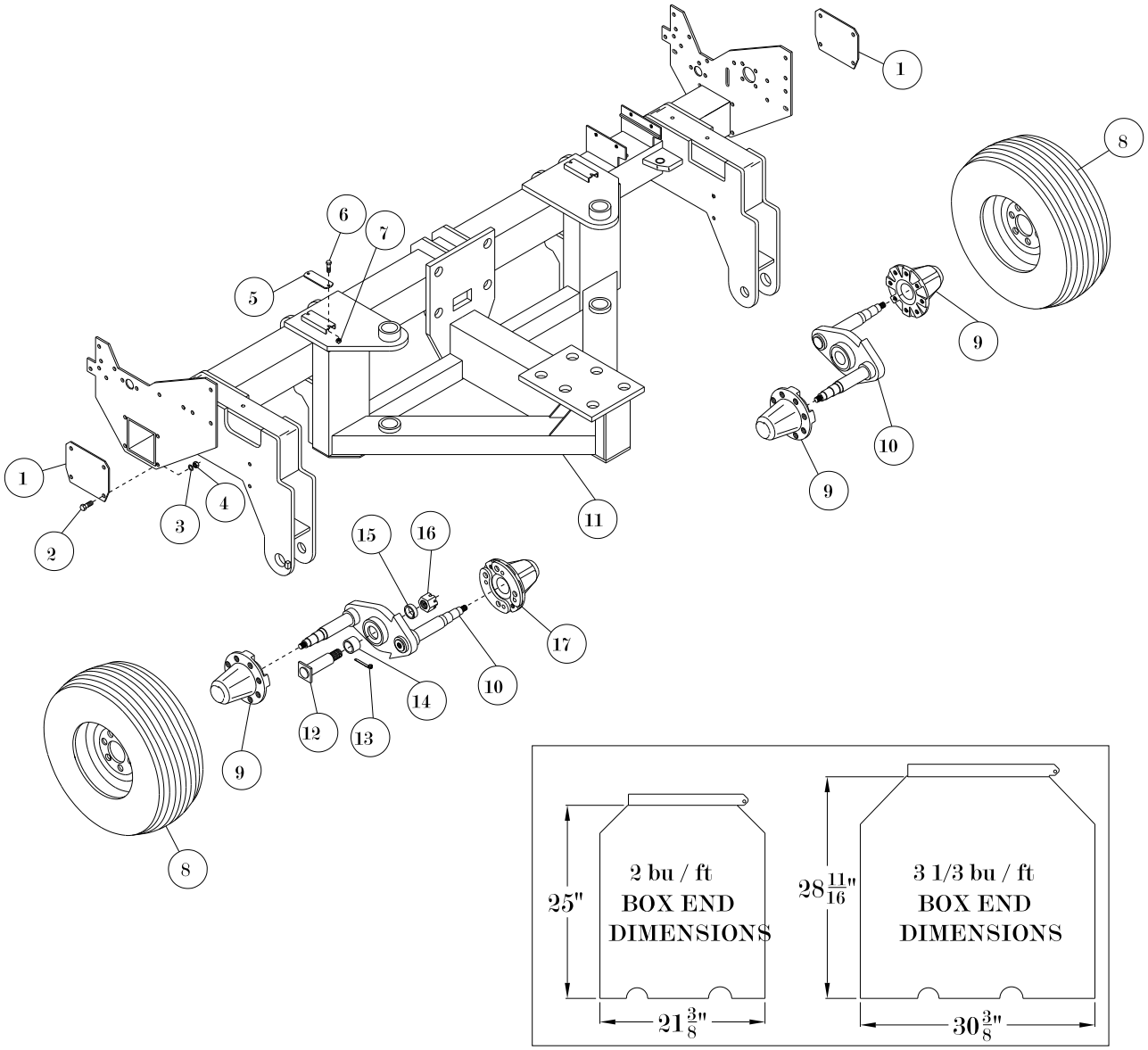

Item	Part No.	Description
1	958173	Frame End Cap
2	01147800	HHCS ½" x 1½"
3	330142	Lock washer ½"
4	330134	Hex Nut ½"
5	217729	Hose Carrier Bolt Plate
6	334243	HHCS 3/8" x 2"
7	330837	Nut 3/8" Nylock
8	032862	Mounted Tire 12.5L x 15
	INCLUDES:	
	02990000	Decal "Check Wheel Lugs"
	530287	Valve Stem
	530931	Tire 12.5L x 15 “F”
	530584	Wheel 8 Bolt 15 x 10

Item	Part No.	Description
9	550897	Hub W778 8 Bolt Complete
10	962639	Tandem Axle
11	962449	Center Frame 3 1/3 Bu Box
	968644	Center Frame 2 Bu Box
12	957258	Tandem Pivot Pin
13	331371	Cotter Pin 5/16" x 3"
14	150409	Tandem Bushing Long
15	150391	Tandem Bushing Short
16	337626	Slotted Hex Nut 1 1/2" SAE
17	865618	Hub W778 8 Bolt w/ Drive Plate

Drive End Bracket & Bearing

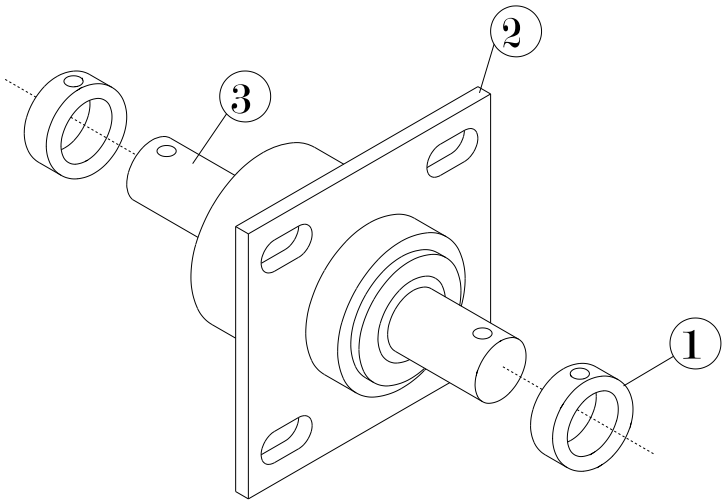

#865089

Item	Part No.	Description
1	06409700	1" Lock Collar
2	865733	Drive Bracket w/ Bearing
3	310037	End Drive Shaft

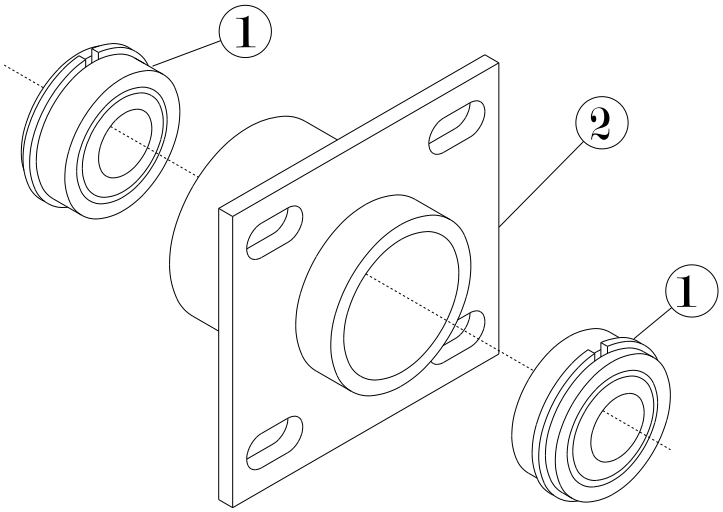

Drive End Bracket

#865733

Item	Part No.	Description
1	03003100	Bearing 1" w/Snap Ring
2	957795	Drive End Bracket

Tandem Axle

Item	Part No.	Description
1	403154	Seal
2	403139	Bearing
3	403147	Race
4	962639	Tandem Axle

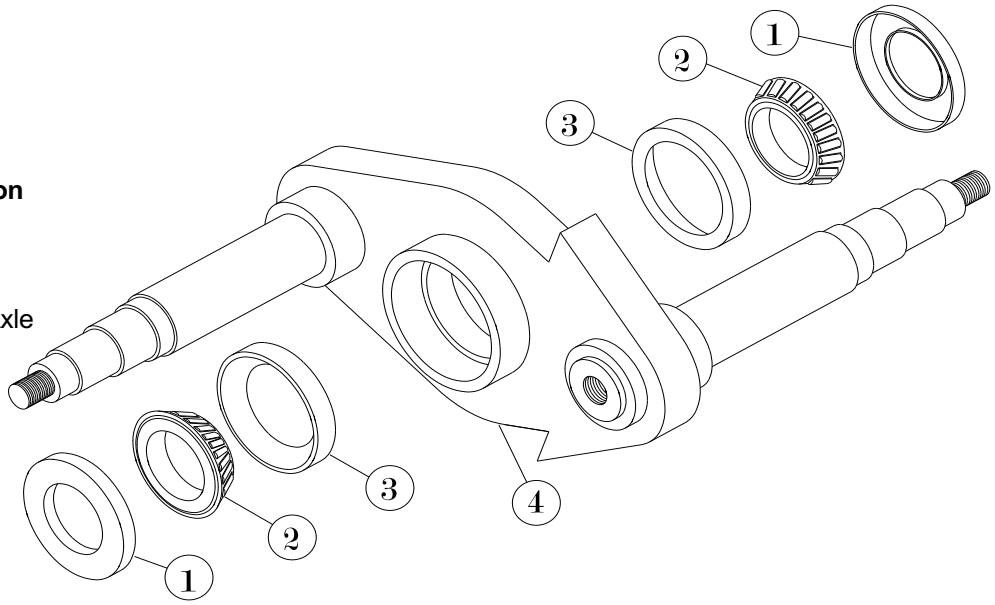

Drive Plate w/Hub

#865618

Item	Part No.	Description
1	551267	Hub w/holes 8 Bolt Complete
	551309	Hub w/holes 8 Bolt cups only
2	218628	Shim
3	217547	Drive Plate
4	337519	Screw 3/8" x 1" Hex Socket Flat Head

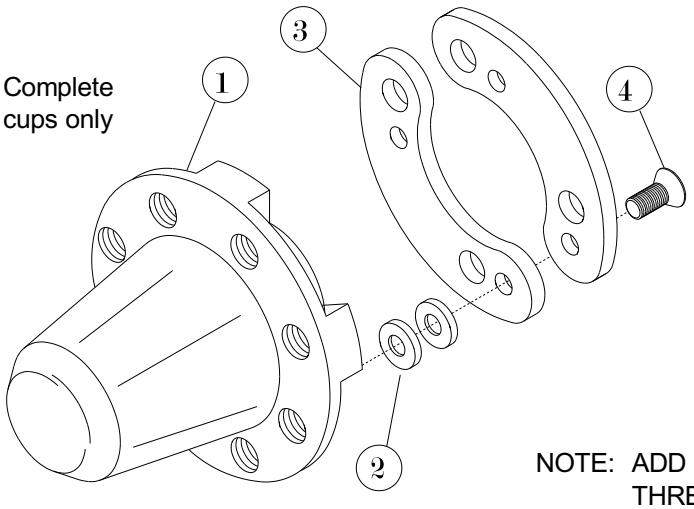

NOTE: ADD LOCK-TITE TO THREADS OF #4 SCREW.

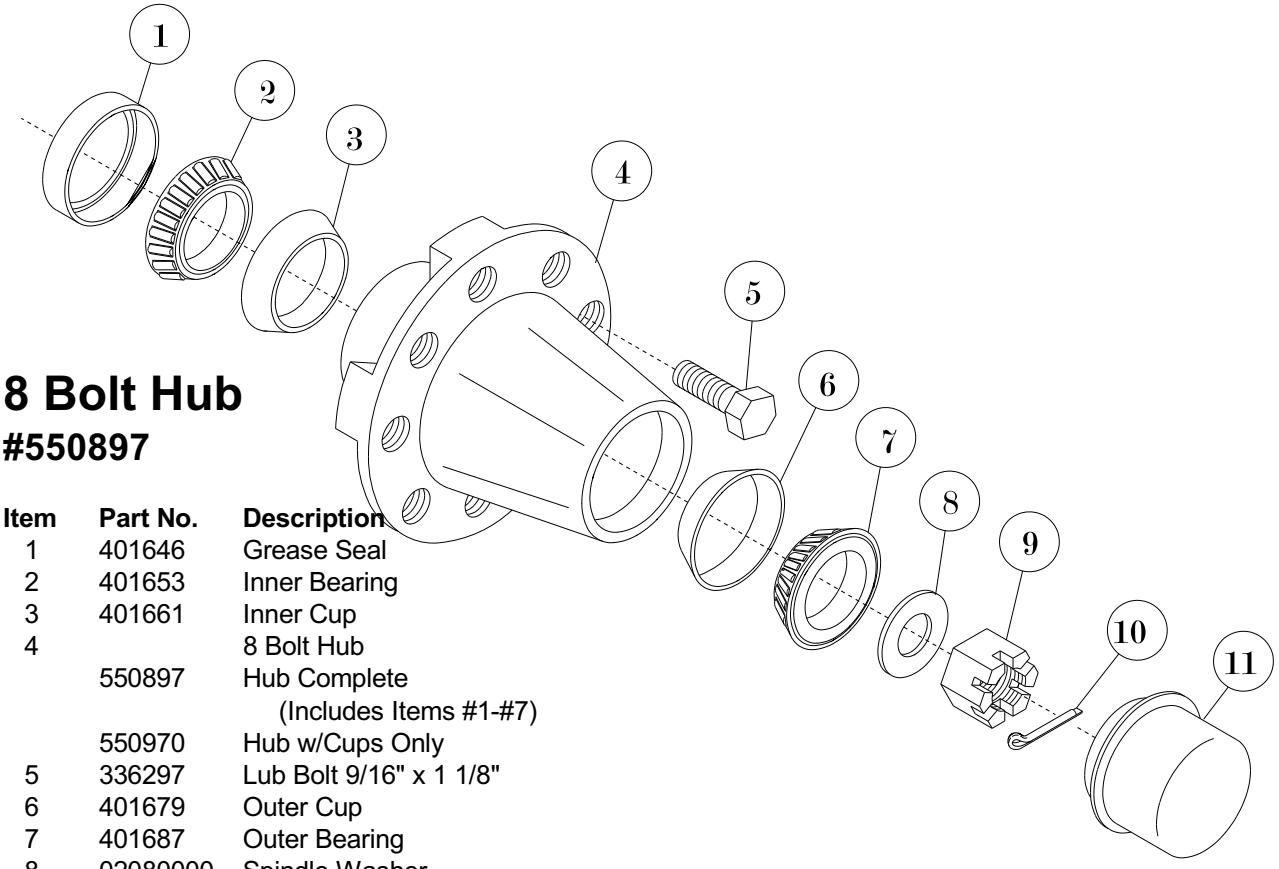

8 Bolt Hub

#550897

Item	Part No.	Description
1	401646	Grease Seal
2	401653	Inner Bearing
3	401661	Inner Cup
4		8 Bolt Hub
	550897	Hub Complete (Includes Items #1-#7)
	550970	Hub w/Cups Only
5	336297	Lub Bolt 9/16" x 1 1/8"
6	401679	Outer Cup
7	401687	Outer Bearing
8	02080000	Spindle Washer
9	331801	Spindle Nut
10	02154300	Cotter Pin
11	603613	Hub Cap

8 Bolt Hub

w/4-3/8" Holes

#551267

Uses same components as #550897. See parts list for #550897.

Center Clutch
#864801

Item	Part No.	Description
1	309864	Throwout Pin Guide
2	08993800	Roll Pin 1/4" x 2"
3	403196	Snap Ring External
4	333351	Machine Bushing 1 1/8 x 5/8 x 18ga
5	502187	Spring
6	865725	Center Drive Sprocket Assy

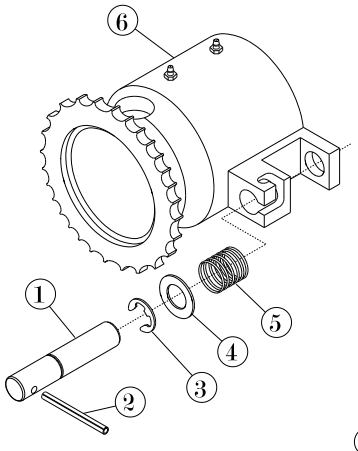

Center Drive Sprocket
#865725

Item	Part No.	Description
1	957332	Center Drive Sprocket
2	402578	Bearing 2 3/16" OD
3	309856	Bearing Spacer Shim
4	403105	Snap Ring Internal

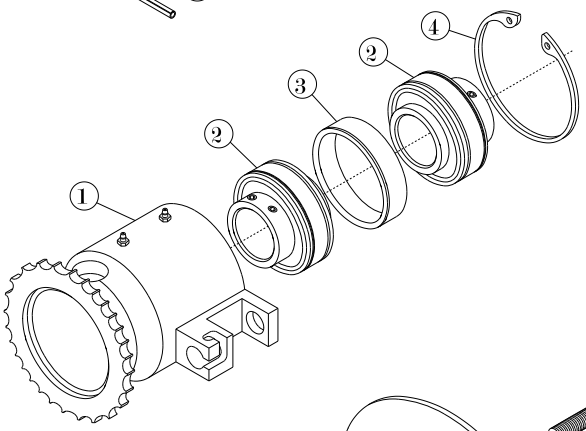

Throw-Out Clutch Half
#860825

Item	Part No.	Description
1	01057900	HHCS 1/4" x 3/4"
2	330050	Lock Washer 1/4"
3	211532	Clutch Throw-out Butt Plate
* 4	860833	Clutch Half Insert Assembly
5	954040	Clutch Half Bushing Insert
6	551226	Clutch Half
7	334805	Set Screw 1/2" x 7 1/2" Socket Head / Cup Point
8	600346	Zerk 1/4"-28 x 17/32"

* Includes Items #5-#8

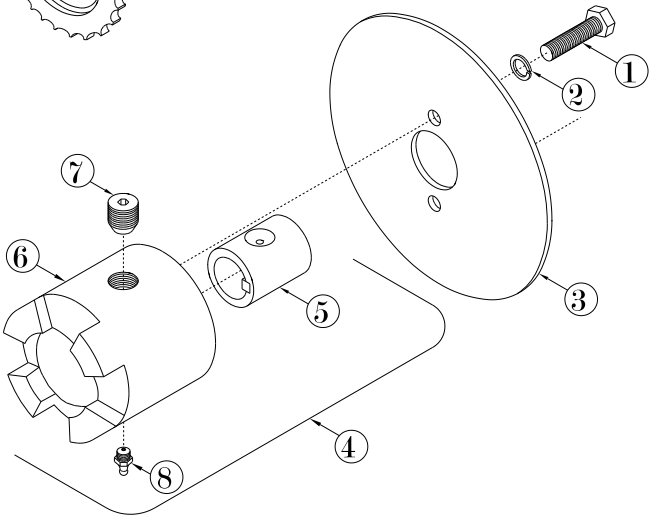

Drive Clutch Sprocket
#863787 18 Tooth
#863795 20 Tooth
#863803 25 Tooth

Item	Part No.	Description
1	337733	Screw 1/4" x 3/4" Counter Sunk
2		Drive Sprocket 2050
	432450	18 Tooth Sprocket
	431700	20 Tooth Sprocket
	432500	25 Tooth Sprocket
* 3	863779	Drive Clutch Assembly
4	401000	Bearing 1"
5	551218	Clutch Drive

* Includes Items #4 & #5.

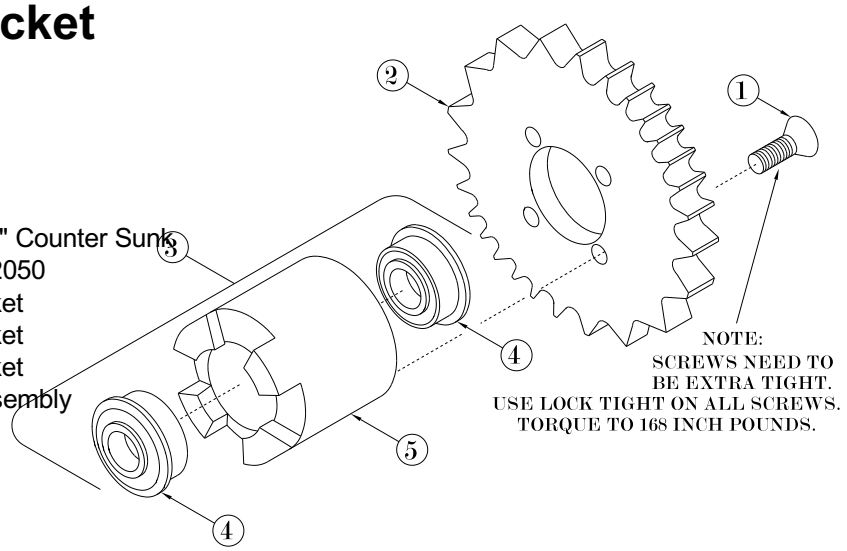

Hitch

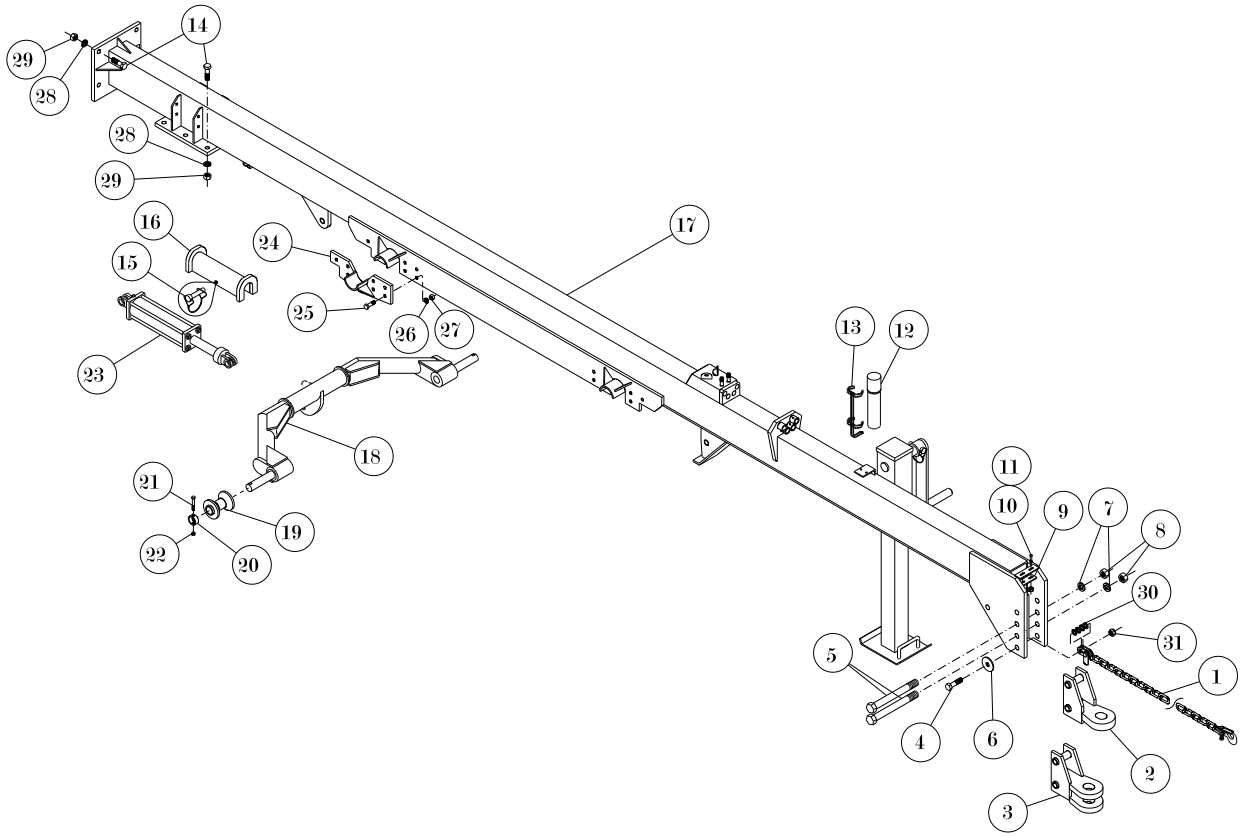

Item	Qty	Part No.	Description
1	1	433953	Safety Chain 41,100#
2	1	963546	Mono-Clevis
3	1	955831	Clevis (Optional)
4	1	334870	HHCS 1" x 4"
5	2	337360	HHCS 1 1/4" x 10"
6	1	20442000	Safety Chain Washer
7	3	332304	Lock Washer 1 1/4"
8	3	331454	Hex Nut 1 1/4"
9	1	217810	Hose Bolt Plate
10	2	334243	HHCS 3/8" x 2"
11	2	330837	Hex Nylock Nut 3/8"
12	1	02889400	Manual Cannister
13	1	02890200	Cannister Mounting Bracket
14	10	334789	HHCS 1" x 3½"
15	2	00233700	Pin-Wire Lock 5/16" x2 3/4"
16	2	964759	Cylinder Lockout
17	1	962456	Hitch

Item	Qty	Part No.	Description
18	2	963272	Wing Carrier
19	4	957191	Wing Carrier Roller
20	4	150326	Wing Carrier Lock Collar
21	4	334300	HHCS ½" x 3½"
22	4	331363	Hex Nylock Nut ½"
23	2	469908	Cylinder 5" x 10"
24			Lower Bearing Plate
	1	957480	Right Rear / Left Front (Shown)
	1	957779	Left Rear / Right Front
25	28	335174	HHCS 3/4" x 2½"
26	28	330332	Lock Washer 3/4"
27	28	330290	Hex Nut 3/4"
28	10	330399	Lock Washer 1"
29	10	330381	Hex Nut 1"
30	4	335166	Machine Bushing 1" x 10 ga
31	1	330597	Hex Nylock Nut 1"

2 Point Hitch Option

#873539

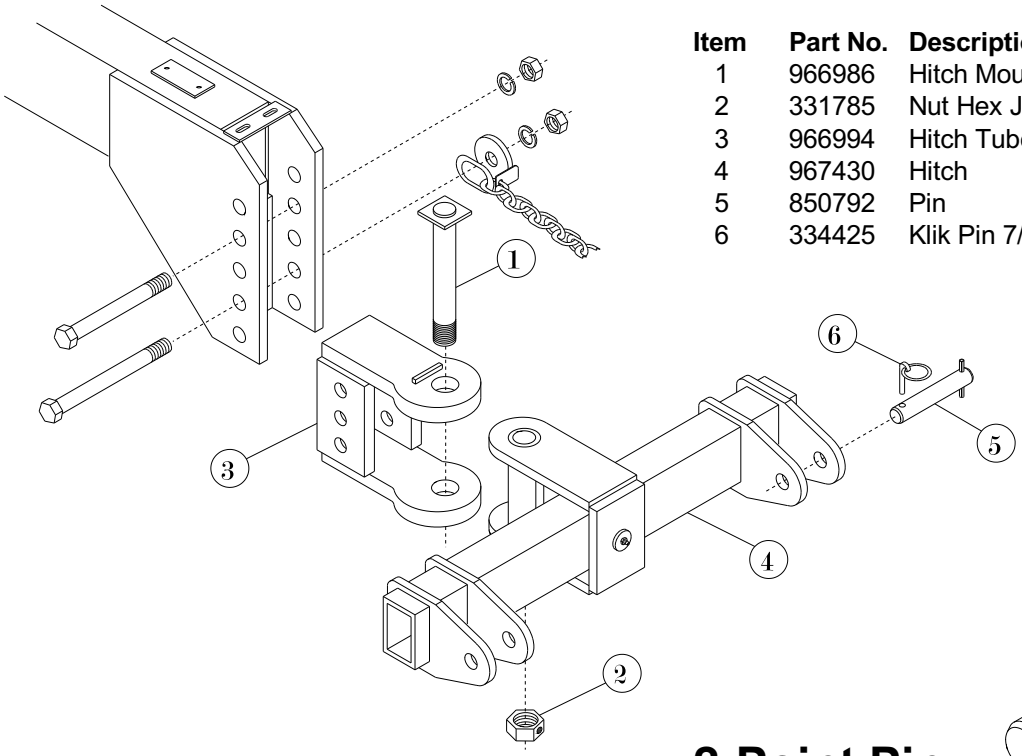

Item	Part No.	Description
1	966986	Hitch Mount Pin
2	331785	Nut Hex Jam 1 3/4" w/set screw
3	966994	Hitch Tube
4	967430	Hitch
5	850792	Pin
6	334425	Klik Pin 7/16" w/2" ring

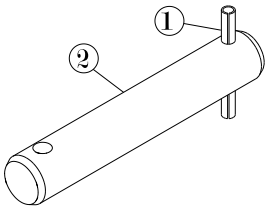

2-Point Pin

#850792

Item	Part No.	Description
1	336248	Roll Pin 3/8" x 2 1/2"
2	336834	Pin 1 1/2" x 9"

Wing Carrier Adjustment

When raising wing carriers be sure carrier rollers are all the way in hook of carrier bracket on front of wing frames (Location **"A"** in view). If this cannot be done, adjust carrier arms by turning wing carrier cylinder clevis in or out until roller is secure in hooks on wing frames.

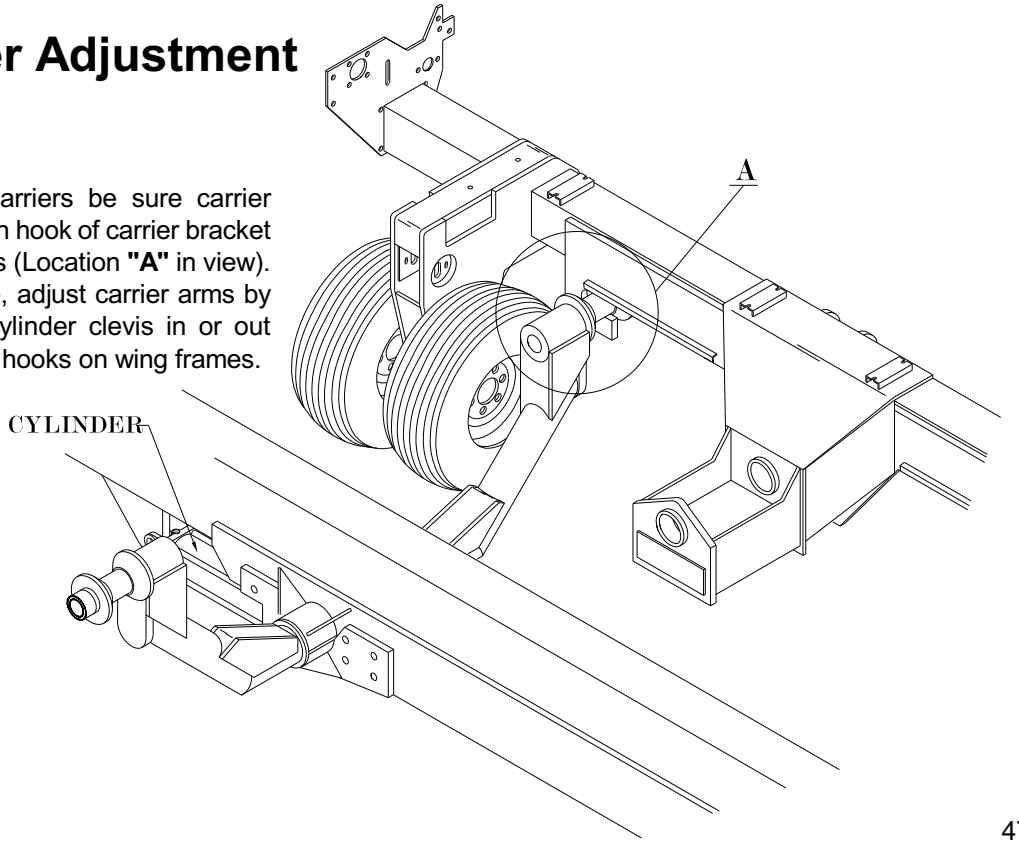

Right and Left Wing Section Repair Parts List are the same except for Items #13 & #32-34.

Right Wing Section

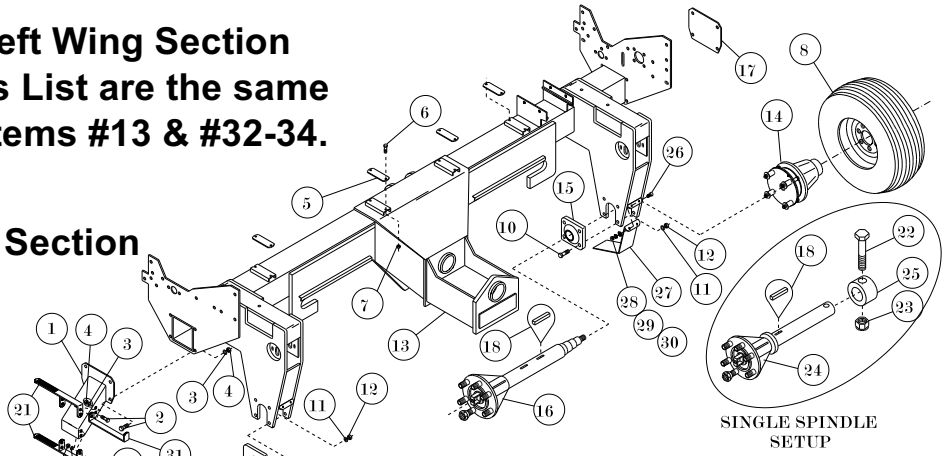

Left Wing Section

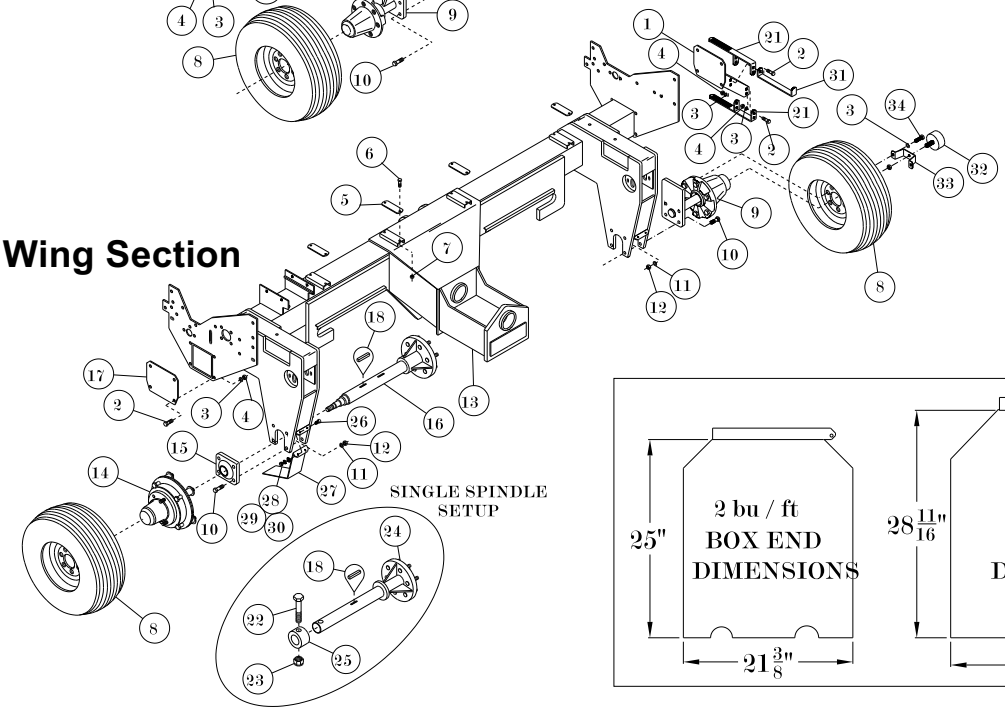

Item	Part No.	Description
1	961953	Frame End Cap w/Step Mount
2	01147800	HHCS 1/2" x 1 1/2"
3	330142	Lock washer 1/2"
4	330134	Hex Nut 1/2"
5	217729	Hose Carrier Bolt Plate
6	334243	HHCS 3/8" x 2"
7	330837	Nut 3/8" Nylock
8	815175	Mounted Tire 11L 8 Ply 6B
INCLUDES:		
	02990000	Decal "Check Wheel Lugs"
	530287	Valve Stem
	530329	Tire 11L x 15 8 Ply
	530147	Wheel 6 Bolt 15 x 10
9	868711	Spindle Assembly
10	06957500	HHCS 5/8" x 2 ½"
11	330878	Lock Washer 5/8"
12	330571	Hex Nut 5/8"
13	962431	Wing Frame Right $3^1/_3$ Bu Box
	963033	Wing Frame Left $3^1/_3$ Bu Box
	968636	Wing Frame Right 2 Bu Box
	968628	Wing Frame Left 2 Bu Box

Item	Part No.	Description
14	870196	Clutch Assy w/Hub l/bolts
15	403279	Bearing 2" 4B Flange
	403287	Insert for #403279
16	961862	Wing Wheel Spindle
17	958173	Frame End Cap
18	310656	Key 3/16" x 1 1/2"
21	963058	Bolt On Step
22	330092	HHCS ½" x 4"
23	331363	Nut Hex Nylock ½"
24	962647	Wing Wheel Spindle
25	145623	Spindle Bushing
26	221432	Wheel Arm Chain Guard
27	331835	HHCS 1/4" x 1"
28	02016400	Flat Washer 1/4"
29	330050	Hex Nut 1/4"
30	332205	Hex Nut 1/4"
31	230433	Lock Out Storage Bracket
	#32-#34	Left Wing Only
32	603720	Acre Meter Counter
33	263962	Acre Counter Bracket
34	337139	Tap Bolt ½" x 2" SAE

Clutch Assembly

#870196

Item	Part No.	Description
*1	330464	Wheel Bolt 1/2" x 1 3/4" SAE
*2	331314	Wheel Nut 1/2"-20 90°
3	551291	Q783 Hub Complete less bolts
4	01225200	HHCS ½" x 5"
5	963835	Clutch Drive Plate
6	337139	Tap Bolt 1/2" x 2" SAE Gr 5
7	222612	Clutch Pressure Plate
8	08476400	Friction Disc 3½" x 6"
9	963827	Clutch Drive & Pressure Plate
10	502286	Spring 1 1/4" x .560 x 1 3/4"
11	330159	Flat Washer ½"
12	331363	Nut ½" Hex Nylock
11	330159	Flat washer 1/2"

* (Not included in assembly)

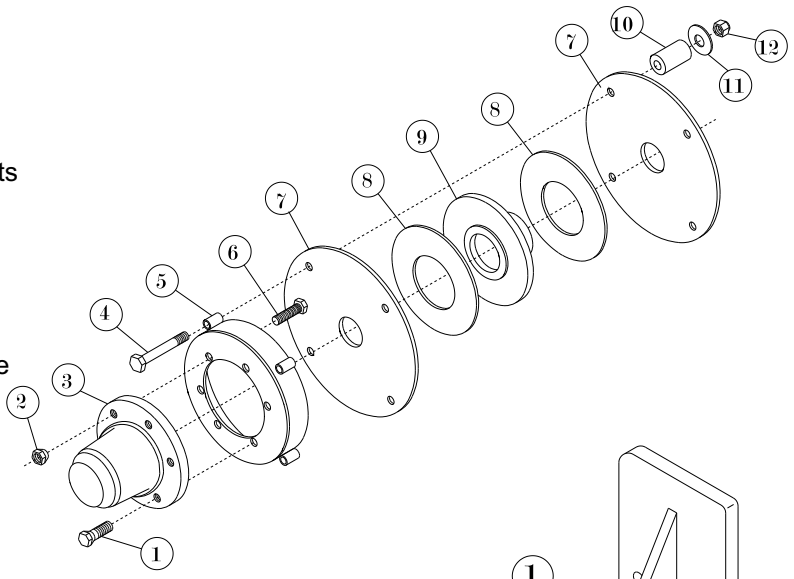

Spindle & Hub Assembly

#868711

Item	Part No.	Description
1	961847	Spindle Weldment
2	551291	6 Bolt Hub less bolts
* 3	330464	Lug Bolt

*Lug Bolts are not included in hub #551291

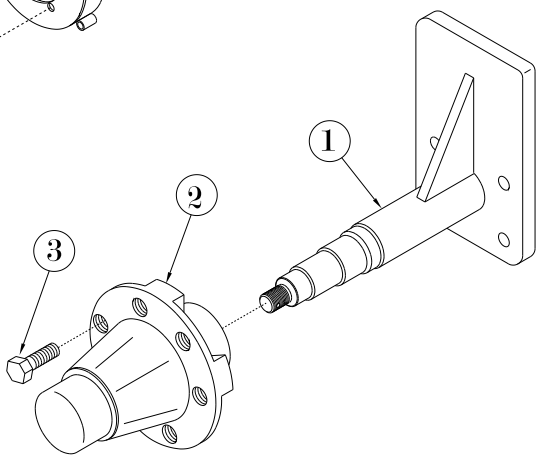

6 Bolt Hub

#551291

Item	Part No.	Description
1	400861	Grease Seal
2	400853	Inner Bearing
3	400846	Inner Cup
4		6 Bolt Hub
	551291	Hub Complete less bolts
	550707	Hub w/cups only
5	330464	Lug Bolt 1/2" x 1 3/4" SAE
6	05742200	Outer Cup
7	05741400	Outer Bearing
8	02080000	Spindle Washer
9	331801	Spindle Nut
10	02154300	Cotter Pin
11	05703400	Hub Cap

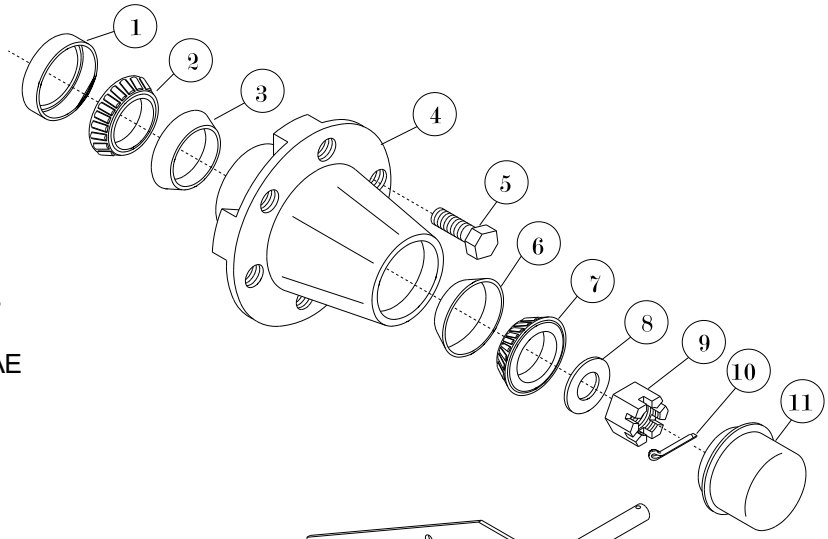

Meter-Man Acre Counter

#867572

Item	Part No.	Description
1	604553	Acre Counter
2	955393	Shaft Extension
3	335349	Clevis pin 1/4" x 1 5/8"
4	337071	Cotter Pin 3/32" x 1/2"

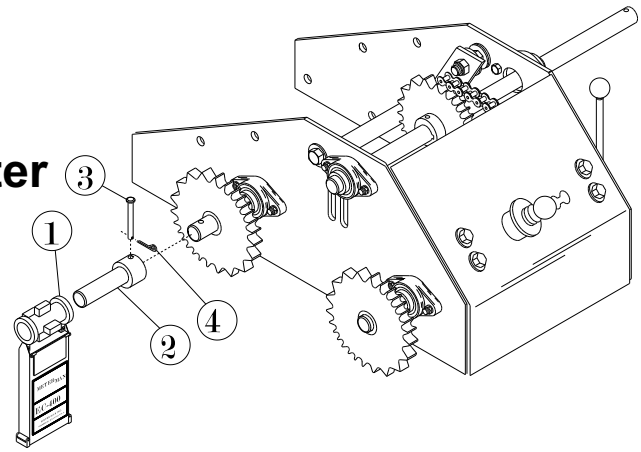

Fold & Pull Bar

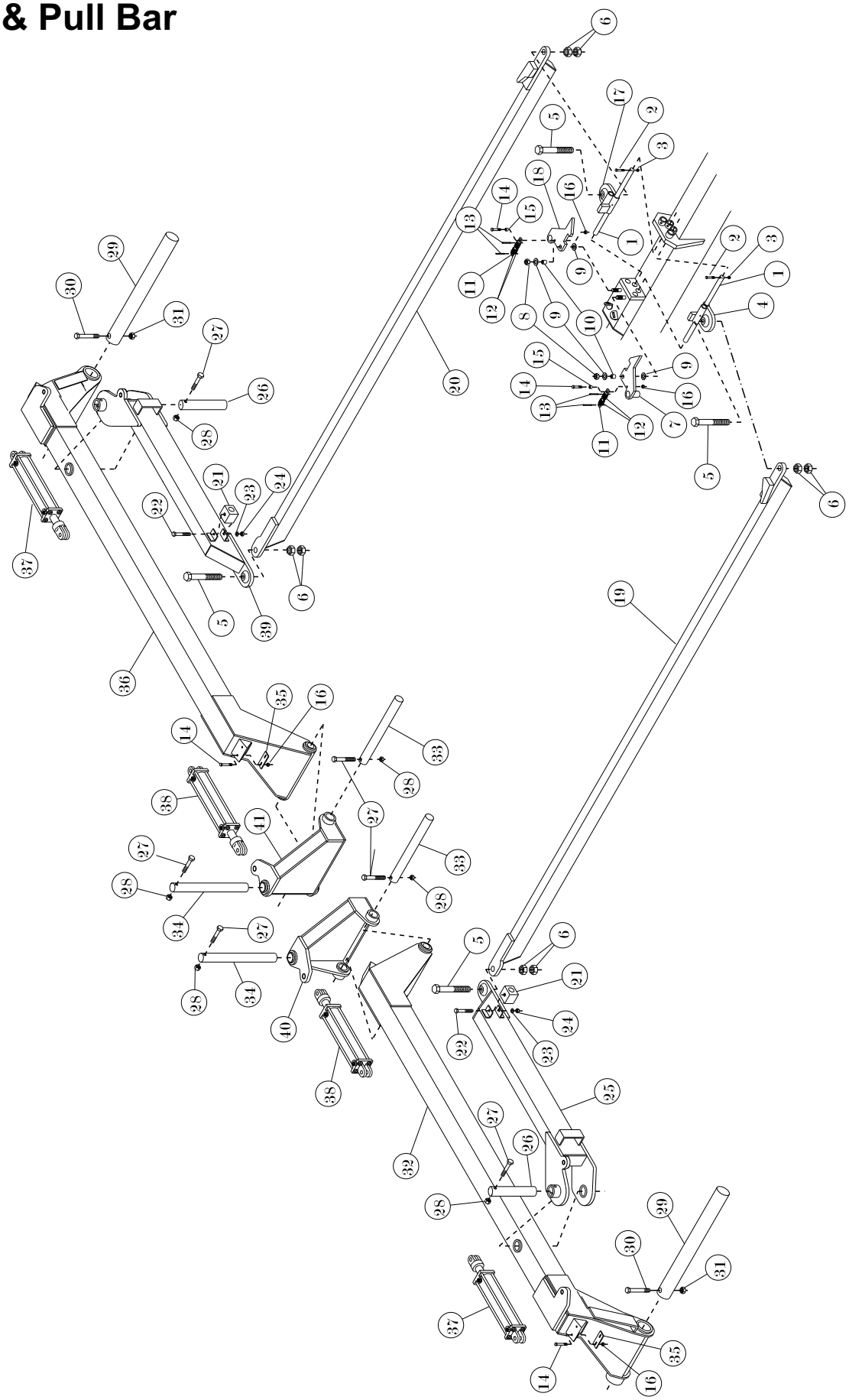

Fold & Pull Bar

Item	Part No.	Description
1	309880	Pull Bar Slide Rod
2	02440600	HHCS 5/16" x 2 1/4"
3	331611	Hex Nut 5/16" Nylock
4	957969	Pull Bar Slide Right
5	337451	HHCS 1 1/2" x 5"
6	331074	Hex Jam Nut 1 1/2"
7	957381	Slide Lock Right
8	330316	Hex Nut 3/4" Nylock
9	330340	Flat Washer 3/4"
10	142646	Bushing
11	216481	Spring Guide
12	501031	Spring
13	330662	Roll Pin 5/16" x 1 3/4"
14	334243	HHCS 3/8" x 2"
15	150441	Bushing
16	330837	Hex Nut 3/8" Nylock
17	957373	Pull Bar Slide Left
18	957399	Slide Lock Left
19	962555	Front Pull Bar Right
20	962563	Front Pull Bar Left
21	605832	Pull Bar Bumper
22	333112	HHCS 3/8" x 4 1/2"
23	330043	Lock Washer 3/8"
24	330035	Hex Nut 3/8"
25	962522	Rear Fold & Pull Bar Right
26	309872	Rear Pull Bar Pin
27	335182	HHCS 5/8" x 4 1/2"
28	01572700	Nut 5/8" Nylock
29	309518	Flex Arm Pin
30	333732	HHCS 1" x 6 1/2"
31	330597	Nut 1" Nylock
32	962464	Flex Arm Right
33	309922	Hinge Pin
34	309914	Hinge Pin
35	217810	Hyd. Hose Bolt Plate
36	962472	Flex Arm Left
37	469916	Cylinder 4 x 8
38	469908	Cylinder 5 x 10
39	962530	Rear Fold/ Pull Bar Left
40	955773	Hinge Right
41	956185	Hinge Left

Fold Slide Detail

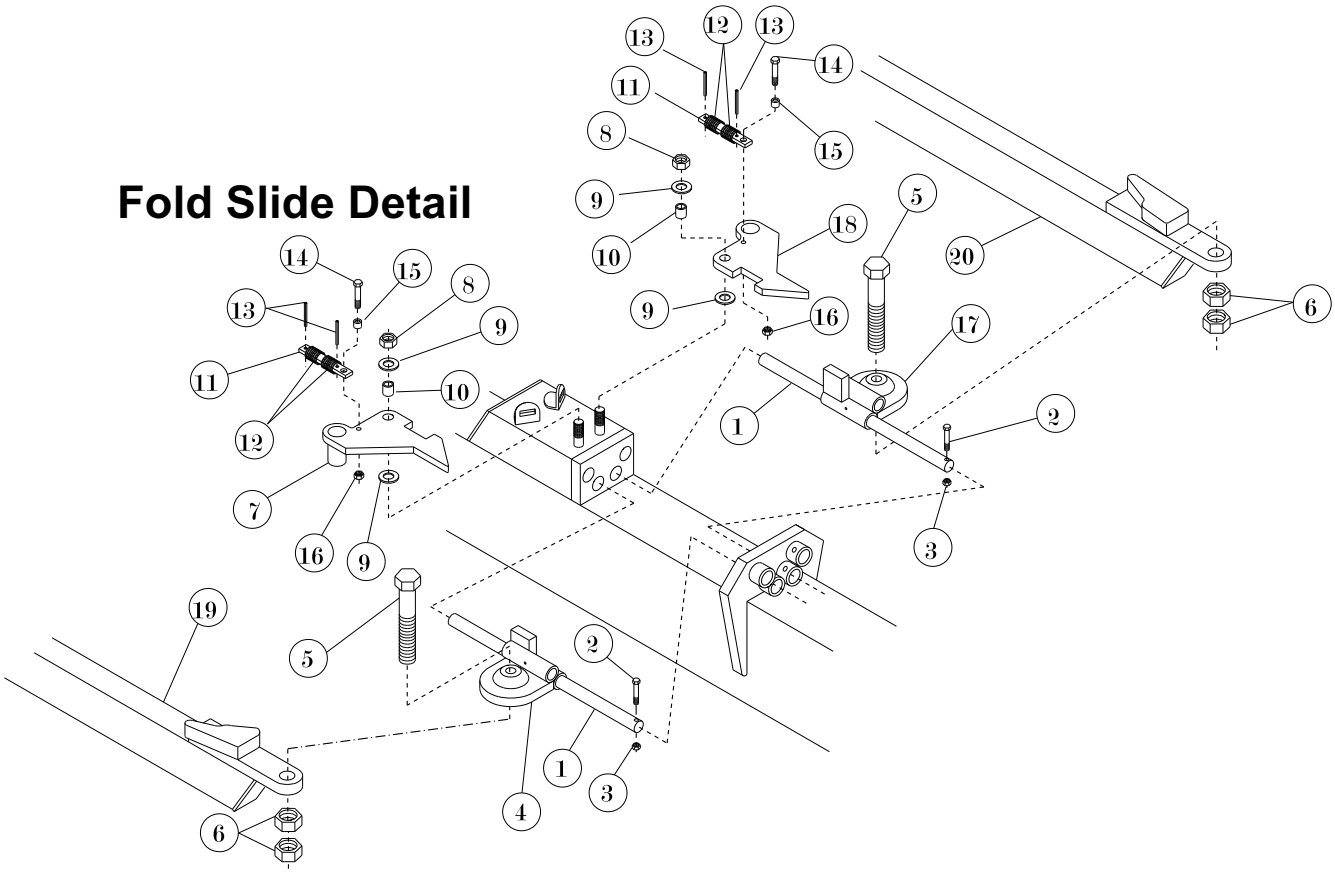

Pull Bar Adjustment

When assembly of pull bar components is complete, adjusting may be required. This is done by laying a string along the centers of the front and rear pivot points with the drill unfolded (indicated by heavy line in view). If all three pivot points are in line (as shown), no adjustment is needed. If pivot points are not in line, adjustment is done by screwing fold cylinder clevis in or out until pivot points are in line.

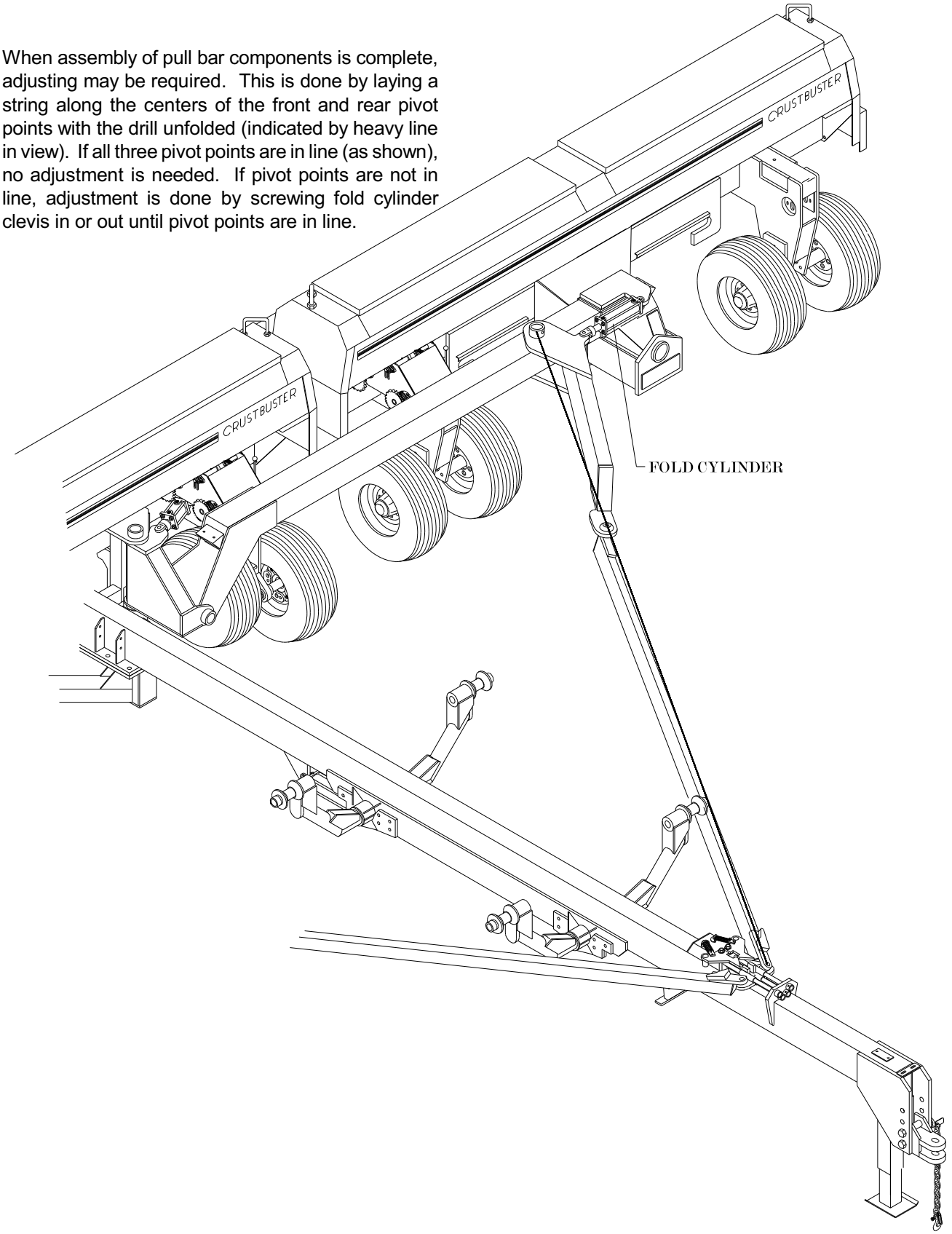

This page left blank intentionally.

4740 Box

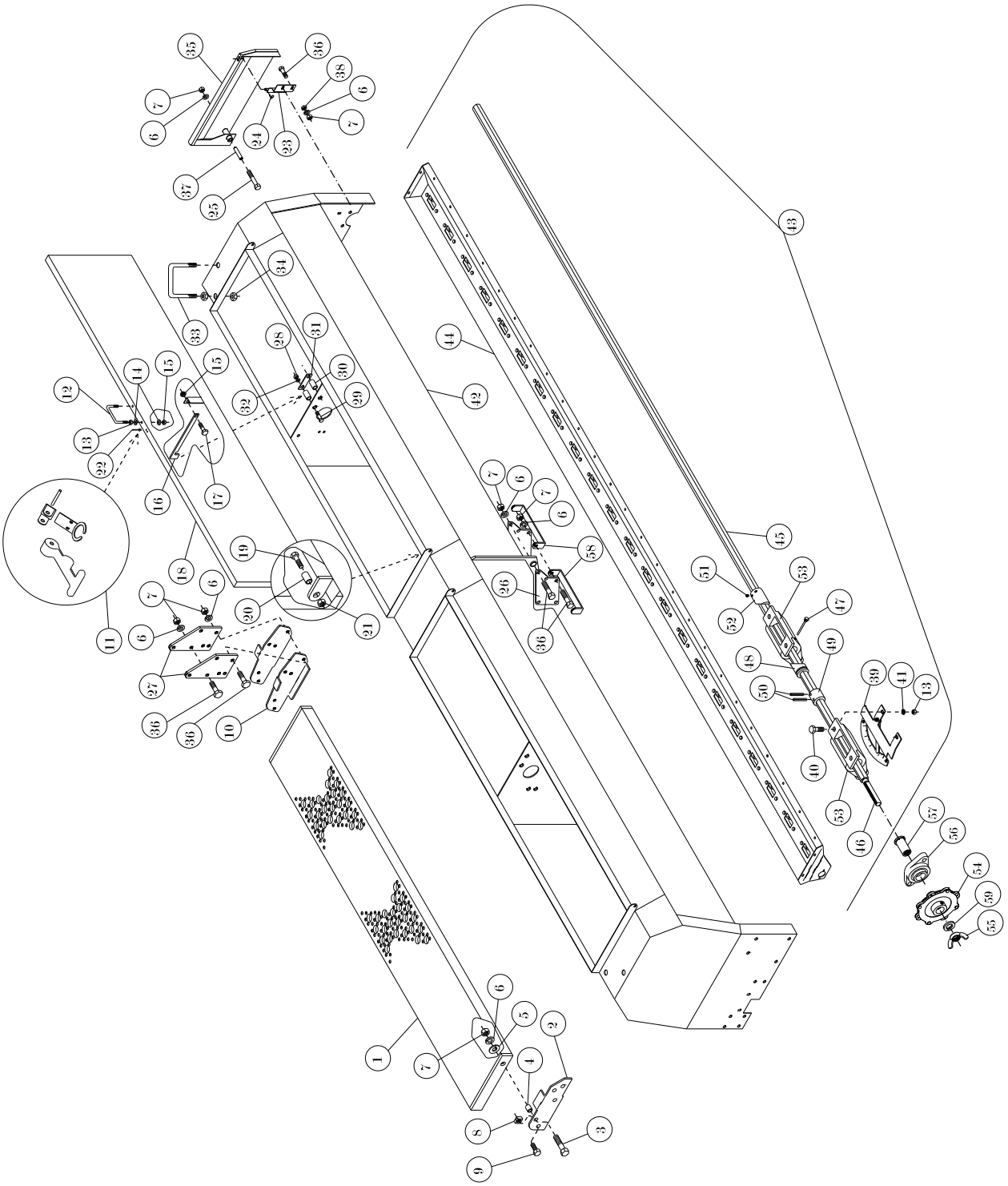

4740 Box

Item	Part No.	Description
1	962589	Walkboard
2	216192	Box End Walkboard Bracket Rt (Shown)
	216226	Box End Walkboard Bracket Lt
3	335240	HHCS 1/2" x 1 3/4"
4	150086	Walkboard Bushing
5	330159	Flat Washer 1/2"
6	330142	Lock Washer 1/2"
7	330134	Hex Nut 1/2"
8	332197	Square Nut 1/2"
9	01029800	HHCS 1/2" x 1"
10	222091	Walkboard Bracket Center Rt (Shown)
	222109	Walkboard Bracket Center Lt
11	570341	Drill Lid Latch w/hook
12	308122	Handle
13	330811	Hex Nut 5/16"
14	330852	Flat Washer 5/16"
15	331611	Hex Nut 5/16" Nylock
16	221317	Lid Latch Bracket
17	01011600	HHCS 5/16" x 1 1/4"
18	962860	Box Lid $3^{1}/_{3}$ Bu Box
	968594	Box Lid 2 Bu Box
19	335703	HHCS 3/8" x 1 1/2"
20	149385	Lid Bushing
21	330837	Hex Nut 3/8" Nylock
22	601989	Pop Rivet 3/16" x 1/4"
23	963843	Chain Guard Latch
24	330928	Klik Pin 3/16"
25	01225200	HHCS ½" x 5"
26	222067	Center Box Bracket
27	222083	Center Walkboard Bracket
28	332205	Hex Nut 1/4"
29	335133	HHCS 1/4" x 1 3/4"
30	145144	Lid Latch Spool
31	190942	Lid Latch
32	330050	Lock Washer 1/4"
33	335737	U-bolt 5/8" x 4" x 3"
34	330571	Hex Nut 5/8"
35	963868	Chain Guard
36	331926	HHCS ½" x 2"
37	152348	Chain Guard Bushing
38	332262	Hex Jam Nut 1/2"
39	874552	Seed Gauge (Rear Mount)
	875518	Seed Gauge (Front Mount)
40	01144500	HHCS 5/16" x 3/4"
41	330845	Lock Washer 5/16 "
42	962845	Grain Box $3^{1}/_{3}$ Bu Box
	962845	Grain Box 2 Bu Box
* 43		Box Bottom Assembly
	869578	7½" Spacing
	869701	10" Spacing Center
	869719	10" Spacing Wing
	869750	15" Spacing
	869768	15" Spacing
44		Box Bottom Weldment
	962951	7½" Spacing
	963066	10" Spacing Center
	963074	10" Spacing Wing
	963090	15" Spacing
	963108	15" Spacing
45	310904	Hex Shaft 139 23/32"
46	310888	Hex Shaft 9 3/4"
47	601716	Wobble Slot Lock Pin
48	550525	Wobble Slot Half w/Groove
49	141895	Shaft Coupler
50	337485	Roll Pin 3/16" x 1 1/4"
51	334516	Set Screw 1/4"-28 x 1/4" Cone Pt
52	550517	Wobble Slot Adjustable Slide
53	550483	Cast Seed Cup
54	874834	Adjustment Handle
55	00751800	Nut 3/4" Wing
56	03001500	Bearing 1" Flange
57	311845	Adjustment Spool
58	230441	Lock Out Storage Bracket
59	330332	Lock Washer 3/4"

* Includes Items #13, #39-41, & #44-53.

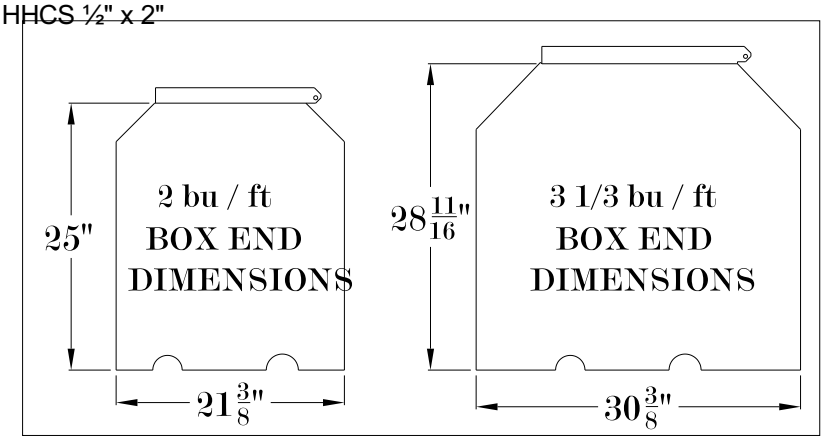

All Plant Tool Bar

Item	Part No.	Description
1	967596	All Plant Tool Bar Center
	967604	All Plant Tool Bar Right
	967612	All Plant Tool Bar Left
2	332130	HHCS 1" x 8" -Wing Frames
	334060	HHCS 1" x 7 1/2" -Center Frame
3	330597	Nut 1" Hex Nylock
4	02288900	Cotter Pin 3/16" x 2"
5	330407	Flat Washer 1"
6	501031	Spring
7	959569	Cylinder Screw Lock -3x8 Cyl.
8	473132	Cylinder 3½ x 8 (Ports 90° to Pins)
9	336057	Roll Pin 1/4" x 1 1/2"
10	08993800	Roll Pin 1/4" x 2"
11	309633	Pin
12	334060	HHCS 1" x 7 1/2"
13	964742	Cylinder Lockout
14	00233700	Pin 5/16" x 2 3/4"

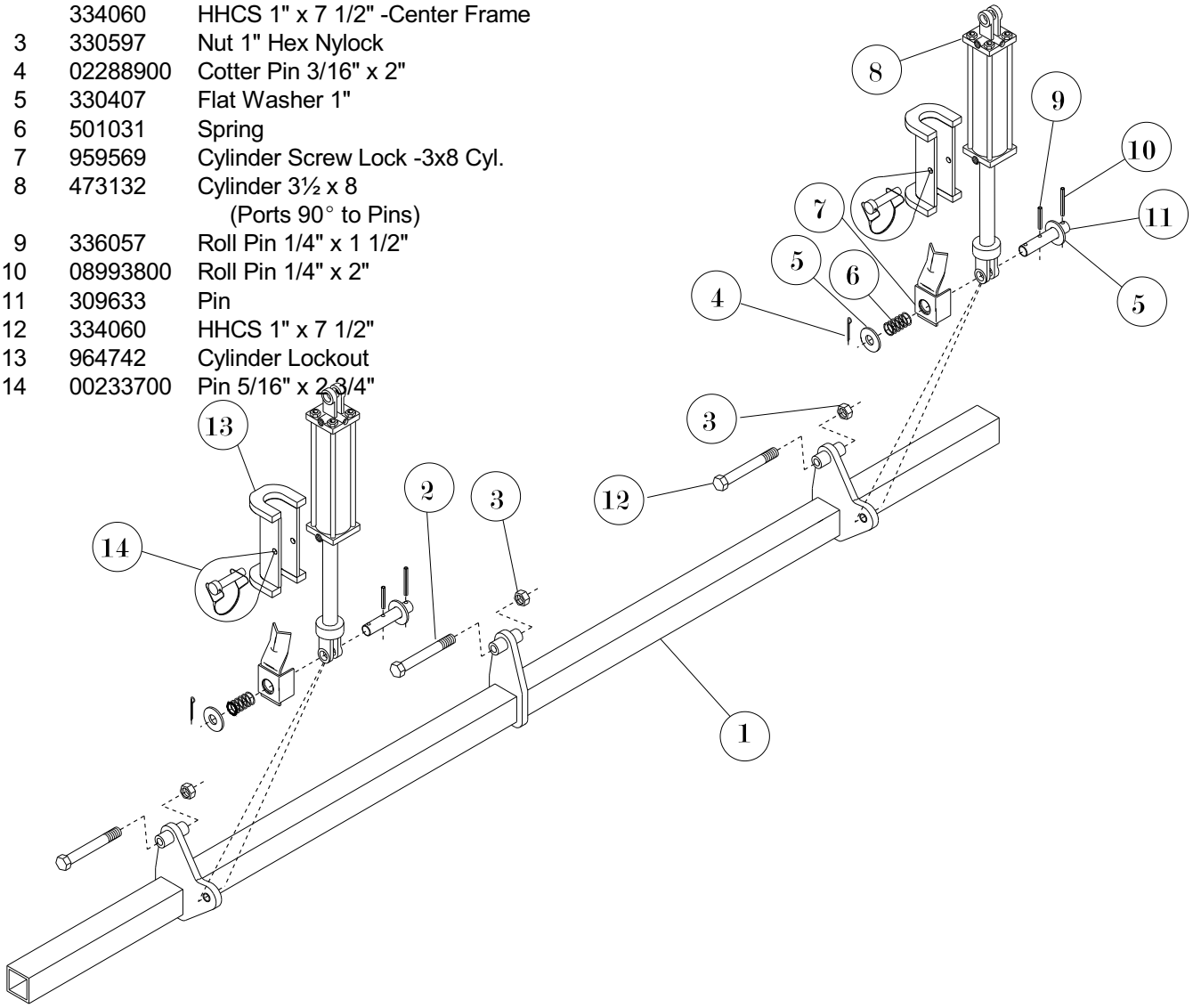

Min-Till Tool Bar

Item	Part No.	Description
1	963660	Min-Till Tool Bar Center
	964924	Min-Till Tool Bar Right
	964916	Min-Till Tool Bar Left
2	332130	HHCS 1" x 8" -Wing Frames
	334060	HHCS 1" x 7 1/2" -Center Frame
3	330597	Nut 1" Hex Nylock
4	02288900	Cotter Pin 3/16" x 2"
5	330407	Flat Washer 1"
6	501031	Spring
7	9595691	Cylinder Screw Lock -3x8 Cyl.
8	473132	Cylinder 3 x 8 w/Depth Control (Ports 90° to Pins)
9	336057	Roll Pin 1/4" x 1 1/2"
10	08993800	Roll Pin 1/4" x 2"
11	309633	Pin
12	334060	HHCS 1" x 7 1/2"
13	964742	Cylinder Lockout
14	00233700	Pin 5/16" x 2 3/4"

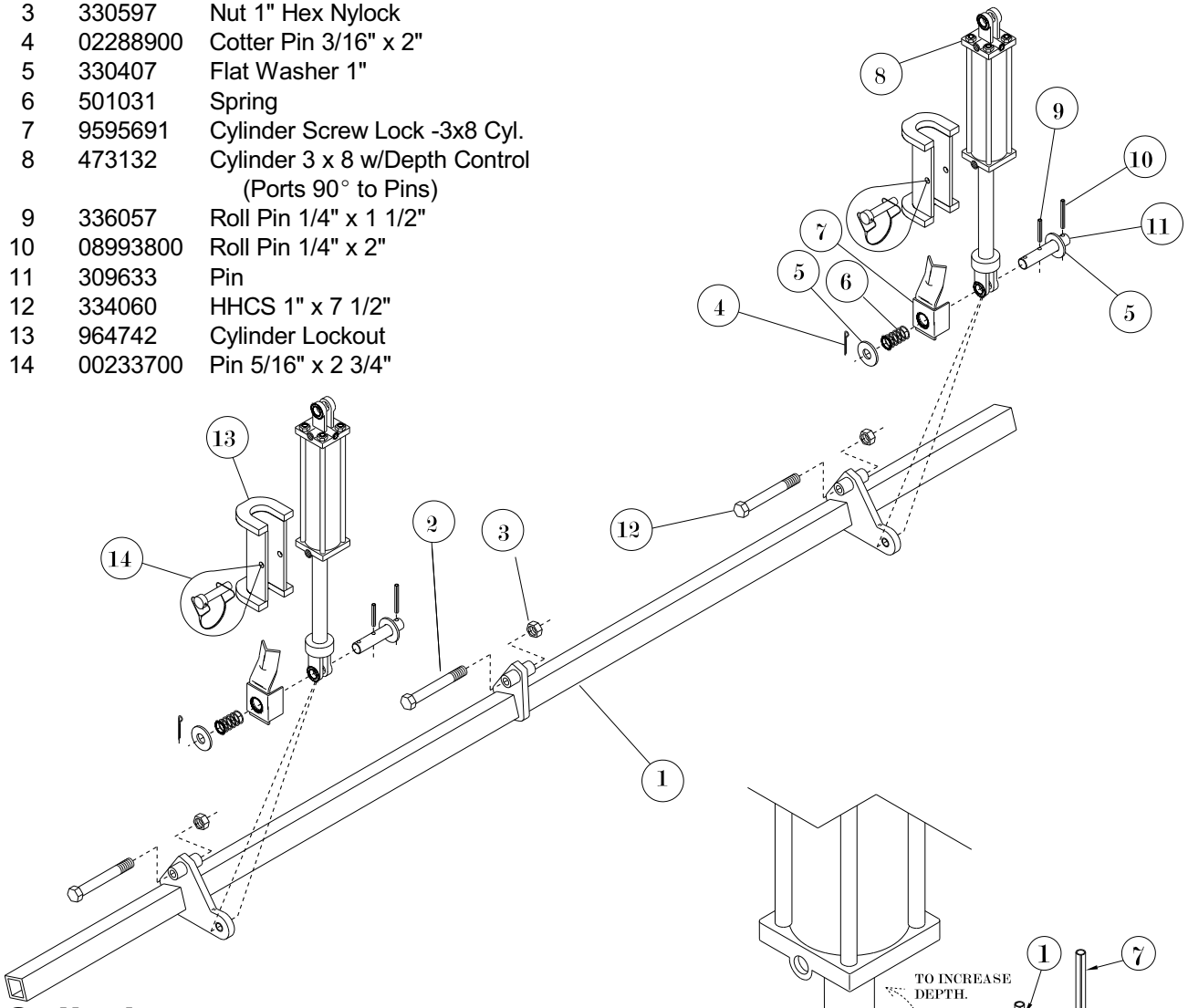

Cylinder Depth Control Lock

Item	Part No.	Description
1	336057	Roll Pin 1/4" x 1 1/2"
2	330407	Flat Washer 1"
3	501031	Spring 7/64" x 2 3/4"
4	959569	Cylinder Screw Holder
5	309633	Cylinder Screw Holder Pin
6	02288900	Cotter Pin 3/16" x 2"
7	08993800	Roll Pin 1/4" x 2"

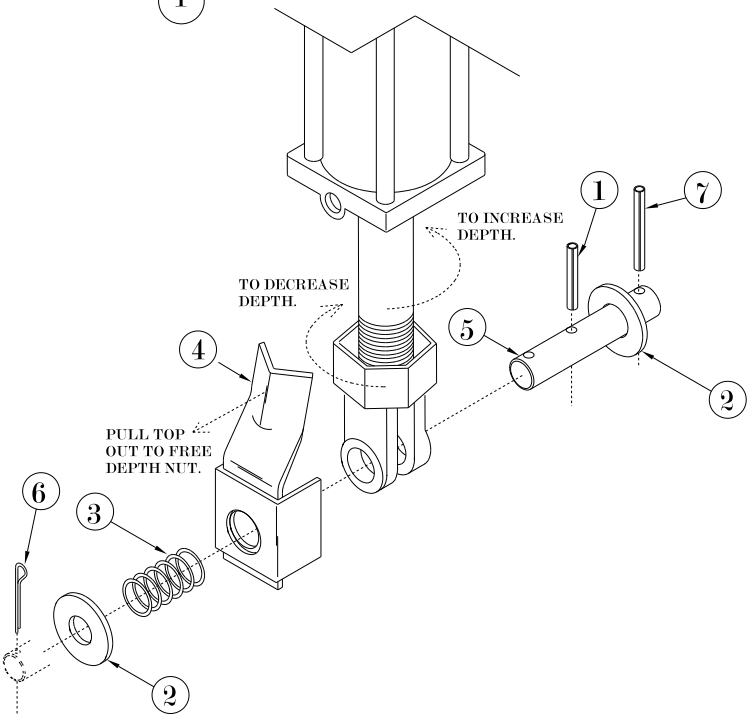

All Plant Opener Assembly

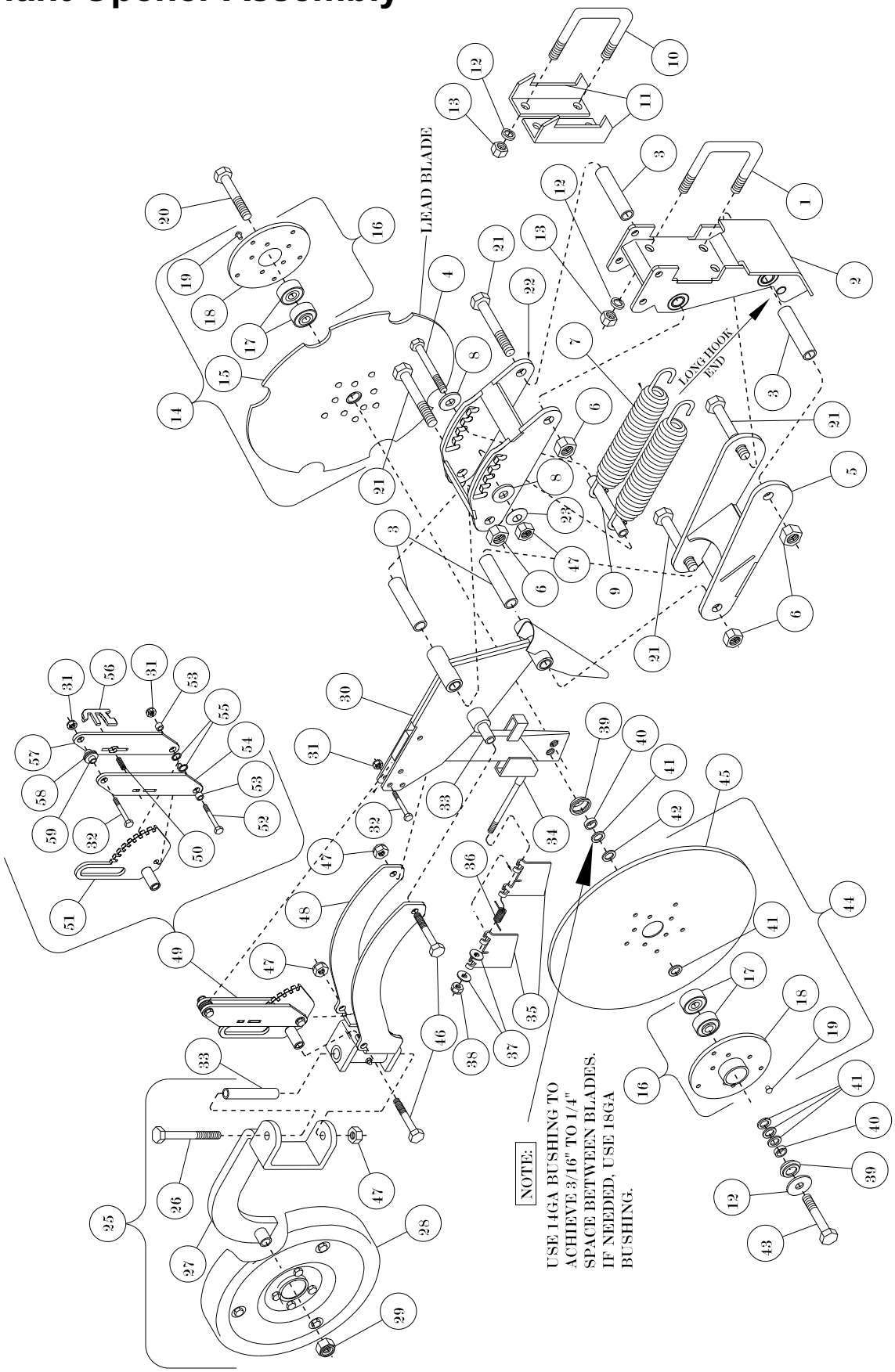

All Plant Opener Assembly

Item	Part No.	Description
	871004	Right Short Opener Assembly
	871012	Left Short Opener Assembly
	871020	Right Long Opener Assembly
	871038	Left Long Opener Assembly
		Items #10,11,13,24-29 & 61-65
		are NOT included in assembly
1		U-Bolt w/Lock washer & Hex nut
	335737	U-Bolt 5/8" x 4" x 3" (2x4 Tube)
	337147	U-Bolt 5/8" x 4" x 5" (4x4 Tube)
2	964692	Opener Mounting Bracket
3	152561	Opener Arm Bushing
4	337972	HHCS ½" x 6"
5	964726	Lower Arm
6	01015700	Center Lock Nut 3/4"
7	502294	Opener Extension Spring
8	330159	Flat Washer ½"
9	152611	Spring Bushing
10	337469	U-Bolt 5/8" x 4" x 6½"
11	217562	Offset Mounting Plate
12	330878	Lock Washer 5/8"
13	330571	Hex Nut 5/8"
14	845925	Double Disc Blade Assy- 6 notch
		Includes #15,16, & 19
15	501437	Blade 16" x 4mm Notched
16	633891	Bearing & Flange Sub-Assembly
		Includes #17 & 18
17	401042	Bearing
18	551200	Bearing Flange
19	603084	Rivet 5/16" x 5/8" Button Head
20	335596	HHCS 5/8" x 3" Gr 8 Left Hand
21	334466	HHCS 3/4" x 6"
22	964718	Upper Arm
23	502302	Curved Spring Washer
24		
25		Presswheel Arm Assembly
		Includes #26-29, 33,47
	859967	Single 3x14 V-Type
	874362	Single 3x13 Center Rib
	874354	Single 3x13 Dual Rib
	859991	Single 2x13 Peaked
	860007	Single 2x13 (Shown)
26	338053	HHCS ½" x 5" Gr 8
27	954636	Presswheel Arm

Item	Part No.	Description
28		Presswheels
	530717	2" x 13" w/Smooth Sides (shown)
	530667	2" x 13" Peaked w/Smooth Sides
	531111	3" x 13" Center Rib Assembly
	530741	3" x 14" V-Type
	531103	3" x 13" w/Smooth Sides
29	01572700	Hex Nylock Nut 5/8"
30	964817	Long Opener -- Left (shown)
	964809	Long Opener -- Right
	964791	Short Opener -- Left
	964783	Short Opener -- Right
31	330837	Hex Nylock Nut 3/8"
32	335877	HHCS 3/8" x 1 3/4" Gr 5
		W/Hex Nylock Nut
33	148999	Bushing 3 19/32"
34	150045	Scraper Bushing 1 3/8"
35	257048	Scraper Plate
36	502146	Scraper Spring - Left (shown)
	502153	Scraper Spring - Right
37	330852	Flat Washer 5/16"
38	336909	Hex Nylock Jam Nut 3/8"
39	400747	Neoprene Dust Seal
40	606558	Bushing 1" OD
41	330720	Machine Bush 1 1/8 x 5/8 x 14ga
42	333351	Machine Bush 1 1/8 x 5/8 x 18ga
43	335620	HHCS 5/8" x 3" Gr 5
44	845917	Double Disc Blade Assy -- Plain
		Includes 16,19, & 45
45	501429	Blade 16" x 4mm Plain
46	337865	HHCS ½" x 4½" Gr 8
		w/Hex Nylock Nut
47	03223500	Reversible Lock Nut ½" Gr 8
48	964908	Presswheel Swivel Bracket
49	871061	Quadrant Sub-Assembly
50	502310	Quadrant Spring 1 1/4
51	964874	Quadrant Handle
52	335703	HHCS 3/8" x 1½" Gr 5
53	149393	Bushing 5/16"
54	224014	Quadrant Strap Right
55	337063	Nylon Washer 11/16"OD x ½"ID
56	224030	Quadrant Lock Latch
57	224022	Quadrant Strap Left
58	604504	Rubber Grommet 1/2" ID x 1" OD
59	149385	Quadrant Bushing 3/4"

Min-Till Opener Assembly

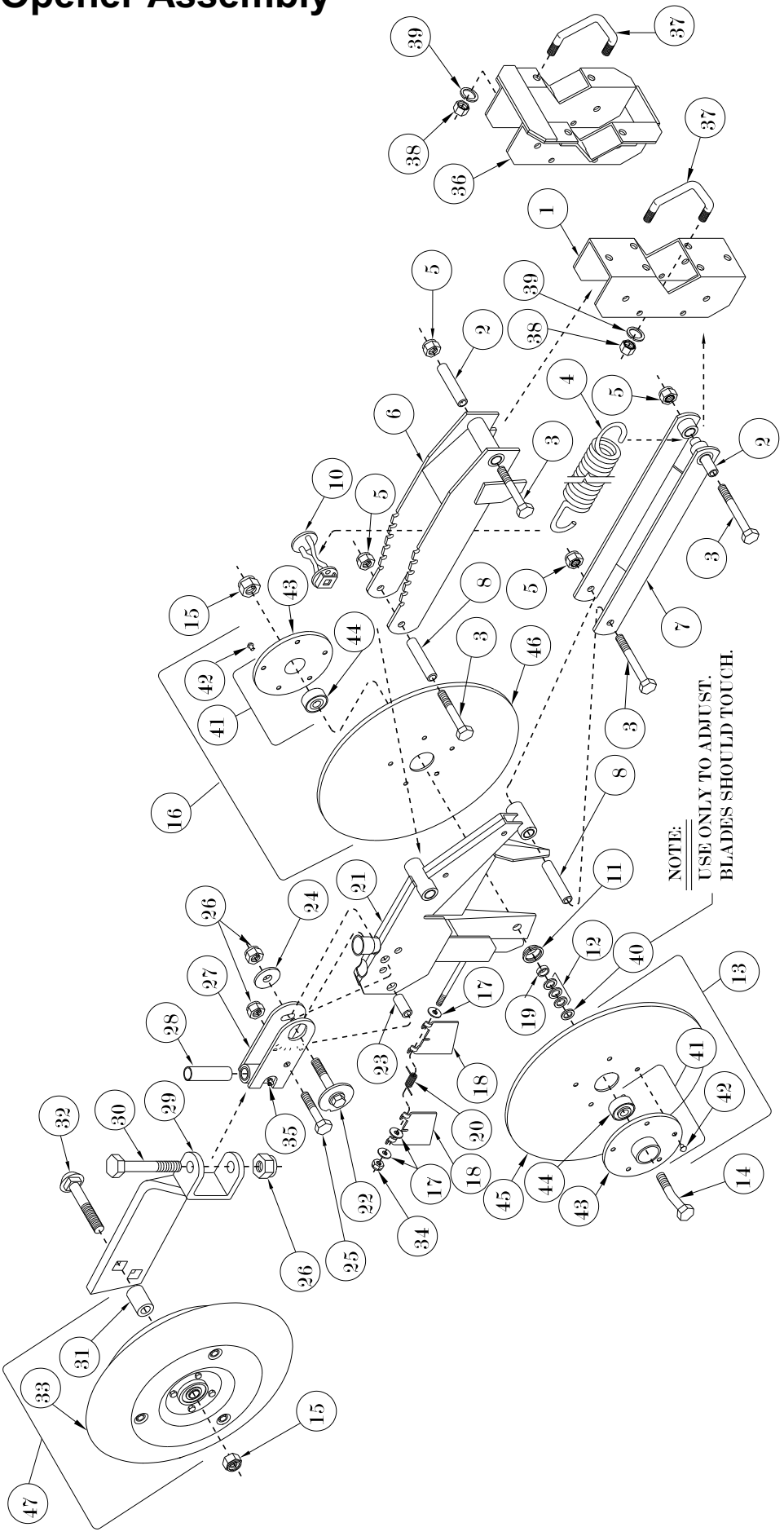

Min-Till Opener Assembly

Item	Part No.	Description
	864942	Right Short Opener Assembly
	864967	Right Long Opener Assembly
	864959	Left Short Opener Assembly
	864975	Left Long Opener Assembly
	865394	Right Short Offset Opener Assy
	865402	Right Long Offset Opener Assy
	865410	Left Short Offset Opener Assy
	865428	Left Long Offset Opener Assy
		Items #37,38,39,&47 are NOT included in Assemblies
1	952788	Opener Mount Bracket
2	148999	Bushing 3 19/32"
3	337865	HHCS ½" x 4½" Grade 8
4	501965	Spring 39 coils
5	334110	Jam Nylock Nut ½"
6	957415	Opener Upper Arm Assembly
7	952770	Opener Lower Arm Assembly
8	149286	Bushing 3 3/32"
9		
10	957407	Opener Spring Adjustment Wa.
11	400747	Neoprene Dust Seal
12	330720	Machine Bushing 1 1/8" x 14ga x 5/8"
13	859090	15" Blade Assembly Includes Items #41, 42, & 45
14	336925	HHCS 5/8" x 3 3/4 Gr 5 w/ 8°bend
15	01572700	Hex Nylock Nut 5/8"
16	863597	13½" Blade Assembly Includes Items #41, 42, & 46
17	330852	Flat washer 5/16"
18	257048	Scraper Plate
19	606558	Blade Bushing 1" OD
20	502153	Scraper Spring Right
	502146	Scraper Spring Left (Shown)
21	957506	Long Opener w/ Liners (Shown)
	957498	Short Opener w/Liners
22	957464	Cam Rotation Bracket
23	150508	Spacer Spool 1 27/64"
24	216747	Cam Washer Plate
25	335422	HHCS ½" x 2½" Gr 5
26	331363	Hex Nylock Nut ½"
27	960245	Presswheel Swivel Bracket-1998
28	148999	Presswheel Arm Bush 3 19/32"
29	960229	Presswheel Arm w/1/2" Pivot Double Hole
30	338053	HHCS ½" x 5" Gr 8
31	150466	Presswheel Bushing (3 x 14)
	144253	Presswheel Bushing (2 x 13) and (3 x 13)
32	337428	Carriage Bolt 5/8" x 4½" Gr 5
33	530741	Presswheel 3 x 14 V-Type
	530667	Presswheel 2 x 13 Peaked w/Smooth Sides
	530717	Presswheel 2 x 13 w/Smooth Sides
34	336909	Hex Jam Nylock Nut 3/8"
35	600072	Zerk 1/4"-28 90°
36	957886	Offset Mounting Bracket (For 8" Spacing Only)
37	308726	Opener Mount Clamp
38	330134	Hex Nut 1/2"
39	330142	Lock Washer 1/2"
40	333351	Machine Bush 1 1/8 x 5/8 x 18ga
41	636860	Bearing Flange Assembly Includes items #43 & #44
42	603084	Rivet 5/16 x 5/8 Button Head
43	551234	Bearing Flange
44	401042	Bearing
45	501973	Blade 15" x 3MM
46	501189	Blade 13½" x 3MM
47		Presswheel Assemblies Includes Items #31 & #33
	864900	3 x 14 Swivel Mount
	864876	2 x 13 Peaked Swivel
	864868	2 x 13 Smooth Swivel
	874370	3 x 13 Dual Rib
	874388	3 x 13 Center Rib

All Plant
Opener Blade Assemblies
#845917
16" Blade Assembly - Plain

Item	Part No.	Description
1	501429	Blade 16" OD 4mm Plain
2	551200	Cast Bearing Flange
3	603084	Rivet 5/16" x 5/8" Button Head
4	401042	Bearing
5	636761	Bearing & Flange Sub-Assy (Includes Items 2 & 4)

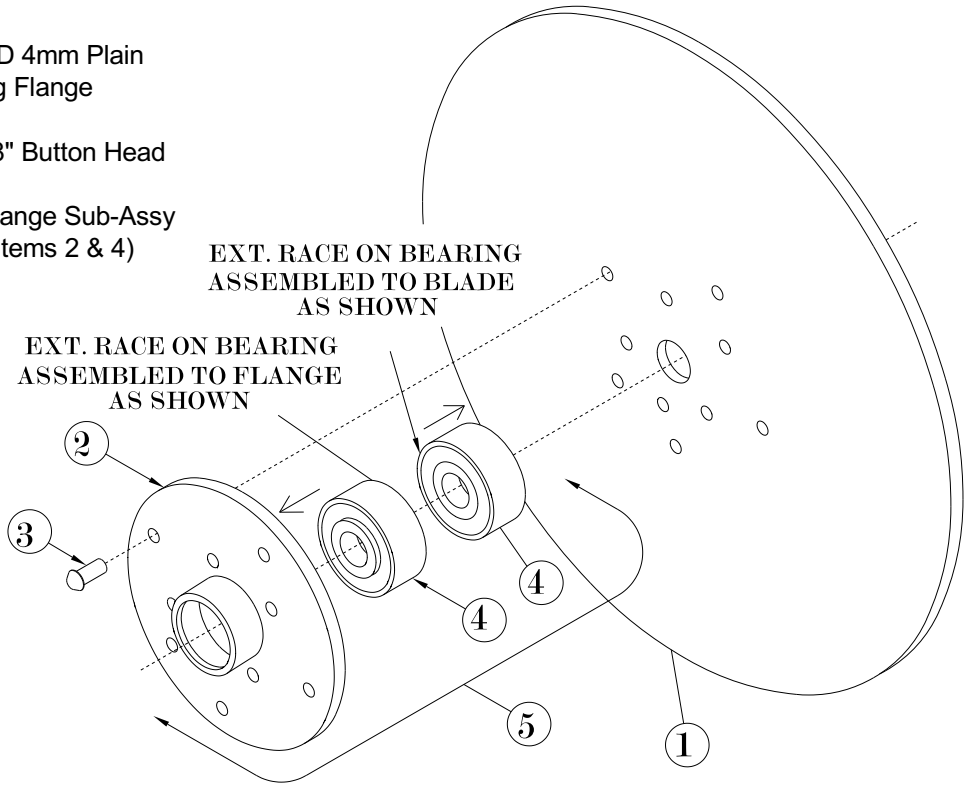

#845925
16" Blade Assembly - Notched

Item	Part No.	Description
1	501437	Blade 16" OD 4mm Notched
2	551200	Cast Bearing Flange
3	603084	Rivet 5/16" x 5/8" Button Head
4	401042	Bearing
5	636761	Bearing & Flange Sub-Assy (Includes Items 2 & 4)

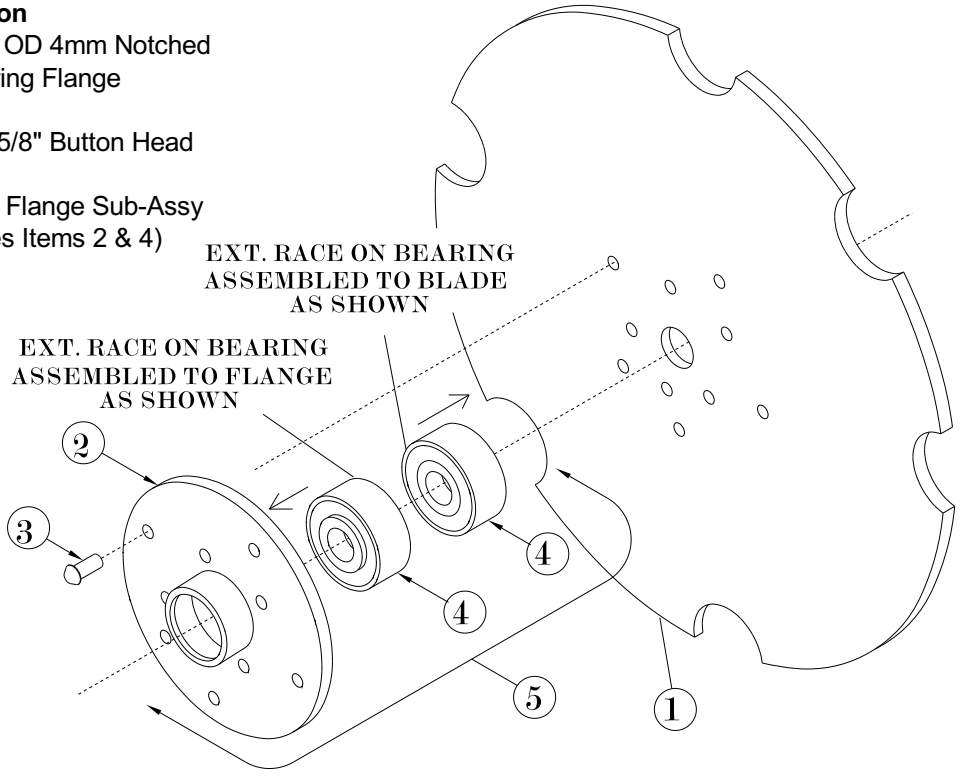

Min-Till
Opener Blade Assemblies

#859090
15" Blade Assembly

Item	Part No.	Description
1	501973	Blade 15" OD x 3MM
2	401042	Bearing
3	603084	Rivet 5/16" x 5/8" Button Head
4	551234	Bearing Flange
	636860	Bearing Flange Assembly (Includes Items 2 & 4)

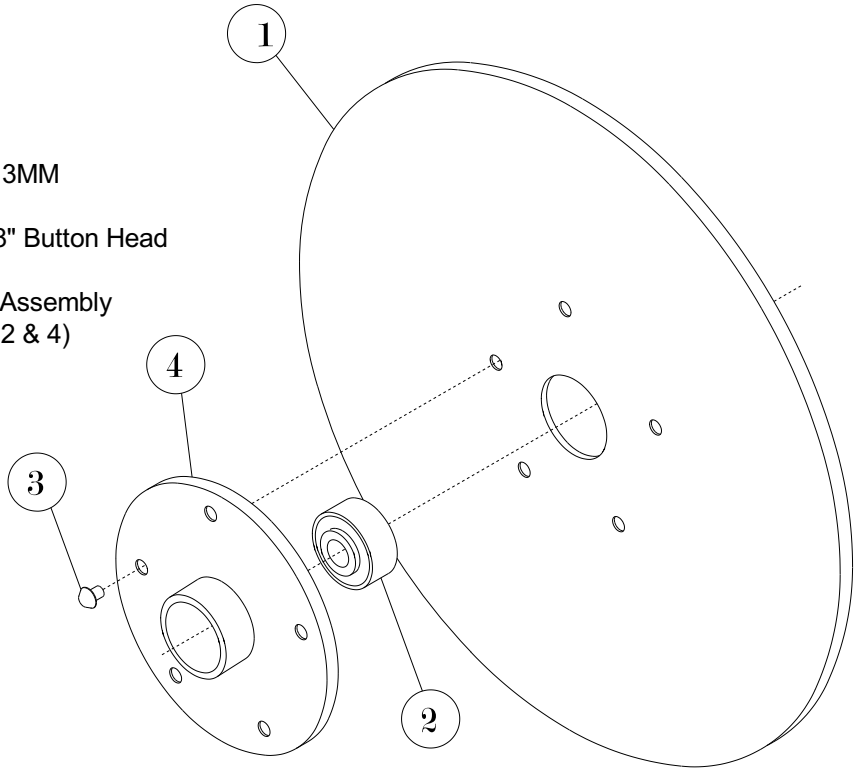

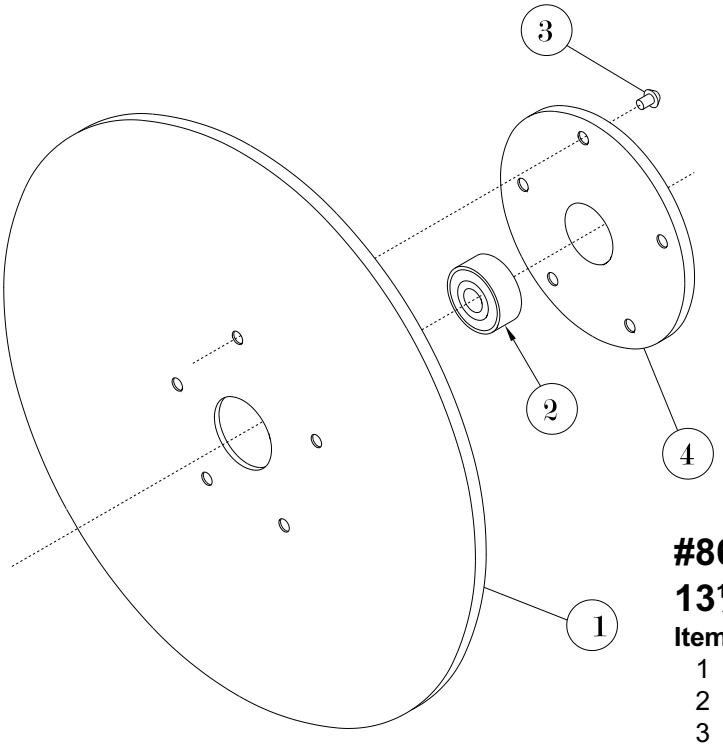

#863597
13½" Blade Assembly

Item	Part No.	Description
1	501189	Blade 13½" OD x 3MM
2	401042	Bearing
3	603084	Rivet 5/16" x 5/8" Button Head
4	551234	Bearing Flange
	636860	Bearing Flange Assembly (Includes Items 2 & 4)

All Plant
Presswheel Arm Assemblies

#874362
3" x 13" Center Rib

Item	Part No.	Description
1	01572700	Hex Nylock Nut 5/8"
2	531111	Presswheel 3 x 13 Center Rib
3	954636	Presswheel Arm
4	338053	HHCS ½" x 5" Gr8
5	331983	HHCS 5/8" x 4"
6	148999	Bushing .747 x .532 x 3.594
7	03223500	Reversible Lock Nut ½" Gr 8
8	151472	Presswheel Shim

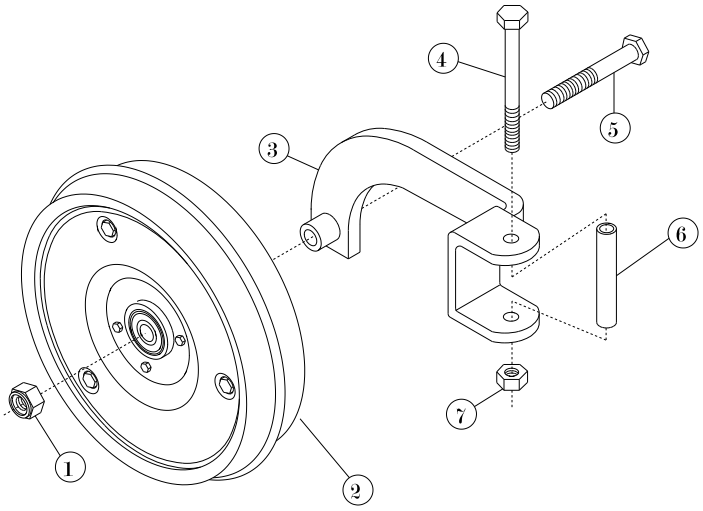

#874354
3" x 13" Dual Rib

Item	Part No.	Description
1	01572700	Hex Nylock Nut 5/8"
2	531103	Presswheel 3 x 13 Dual Rib
3	954636	Presswheel Arm
4	338053	HHCS ½" x 5" Gr8
5	331983	HHCS 5/8" x 4"
6	148999	Bushing .747 x .532 x 3.594
7	03223500	Reversible Lock Nut ½" Gr 8
8	151472	Presswheel Shim

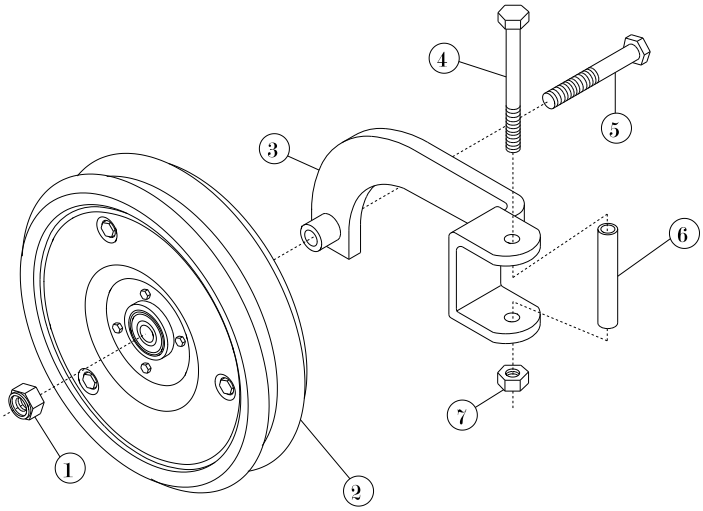

All Plant
Presswheel Arm Assemblies

#859991
2" x 13" Peaked w/Smooth Sides

Item	Part No.	Description
1	01572700	Hex Nylock Nut 5/8"
2	530667	Presswheel 2 x 13 Peaked w/Smooth Sides
3	954636	Presswheel Arm
4	338053	HHCS ½" x 5" Gr8
5	331983	HHCS 5/8" x 4"
6	148999	Bushing .747 x .532 x 3.594
7	03223500	Reversible Lock Nut ½" Gr 8
8	151472	Presswheel Shim

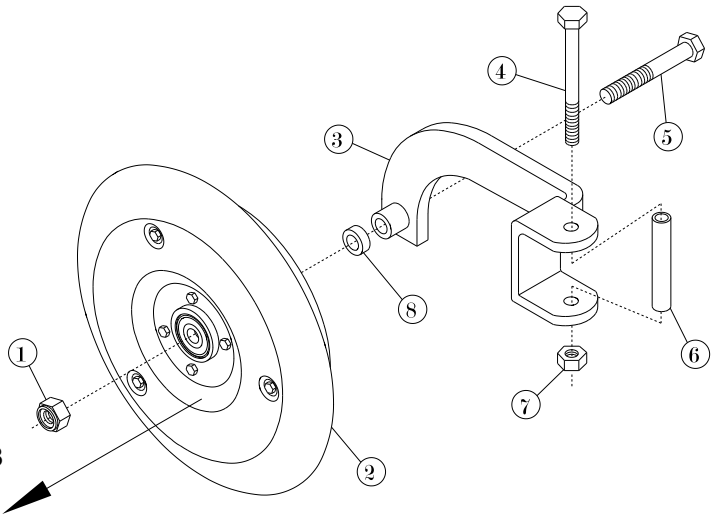

Assemble wheel with extended race of bearing in direction of arrow.

#860007
2" x 13" w/Smooth Sides

Item	Part No.	Description
1	01572700	Hex Nylock Nut 5/8"
2	530717	Presswheel 2 x 13 w/Smooth Sides
3	954636	Presswheel Arm
4	338053	HHCS ½" x 5" Gr8
5	331983	HHCS 5/8" x 4"
6	148999	Bushing .747 x .532 x 3.594
7	03223500	Reversible Lock Nut ½" Gr 8"
8	151472	Presswheel Shim

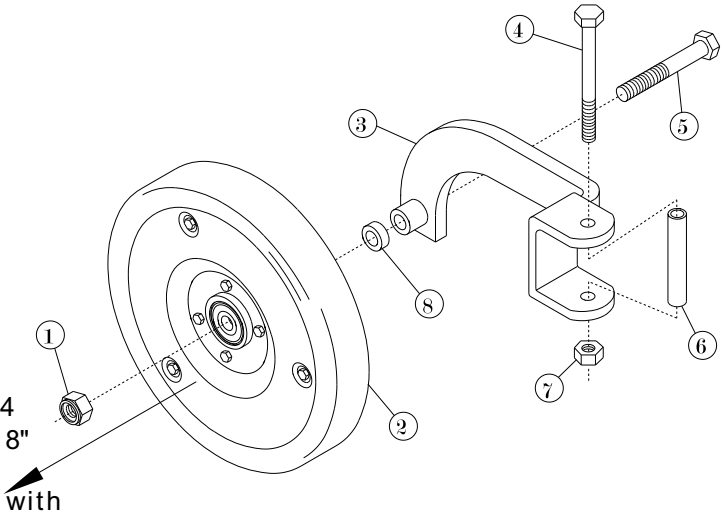

Assemble wheel with extended race of bearing in direction of arrow.

#859967
3" x 14" V-Type

Item	Part No.	Description
1	01572700	Hex Nylock Nut 5/8"
2	530741	Presswheel 3 x 14 V-Type
3	954636	Presswheel Arm
4	338053	HHCS ½" x 5" Gr8
5	335182	HHCS 5/8" x 4 1/2"
6	148999	Bushing .747 x .532 x 3.594
7	03223500	Reversible Lock Nut ½" Gr 8

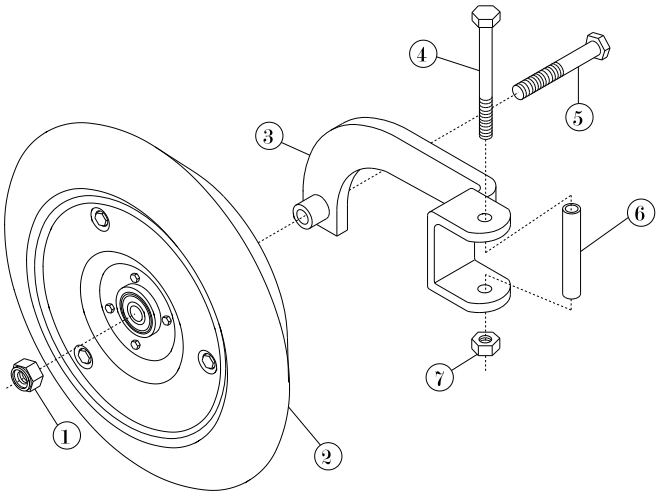

Presswheel Assemblies

#531111 (Hammer)
3" x 13" Center Rib

Item	Part No.	Description
1		HHCS 3/8" x 2½" Gr 5
2	531145	3x13 Presswheel Side
3	403188	Bearing
4	531152	Presswheel 3" x 13" Center Rib
5	606152	Bushing
6	337857	HHCS 3/8" x 1 3/8" Gr 5
7		Hex Lock nut 3/8"

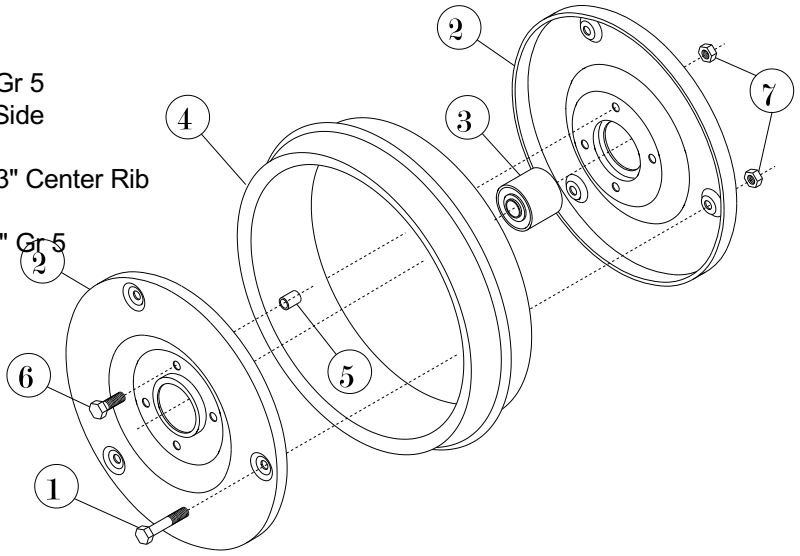

#530741 (Hammer)
3" x 14" V-Type

Item	Part No.	Description
1		HHCS 3/8" x 2.5" Gr 5
2	530782	3x14 Smooth Presswheel Side
3	403188	Bearing
4	530774	Presswheel 3" x 14" V-Type
5	606152	Bushing
6	337857	HHCS 3/8" x 1 3/8" Gr 5
7		Hex Locknut 3/8"

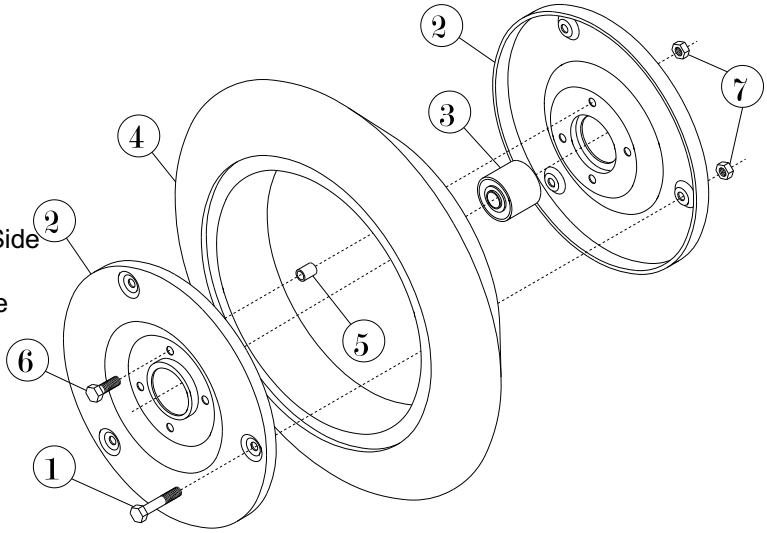

#531103 (Hammer)
3" x 13" Dual Rib

Item	Part No.	Description
1		HHCS 3/8" x 2½" Gr 5
2	531145	3x13 Presswheel Side
3	403188	Bearing
4	531137	Presswheel 3" x 13" Dual Rib
5	606152	Bushing
6	337857	HHCS 3/8" x 1 3/8" Gr 5
7		Hex Lock nut 3/8"

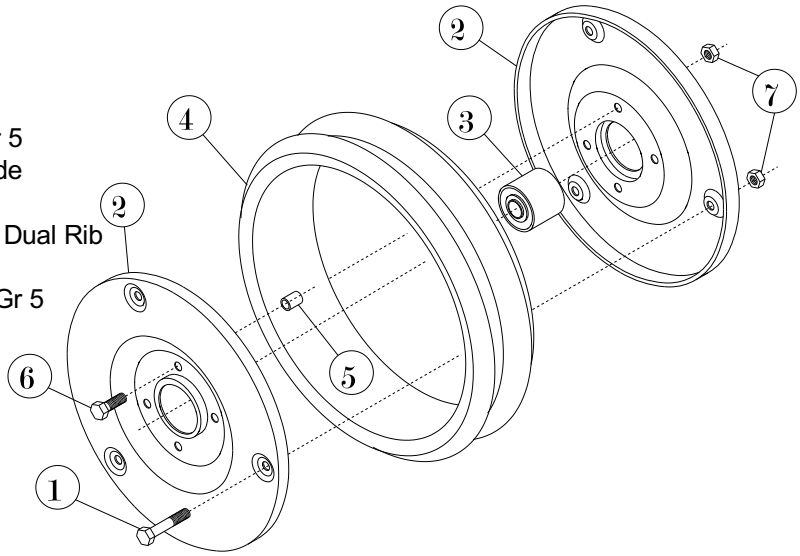

Presswheel Assemblies

#530667 (Hammer)
2" x 13" Peaked w/Smooth Sides

Item	Part No.	Description
1		HHCS 3/8" x 1 5/8" Gr 5
2		HHCS 3/8" x 5/8" Gr5
3	530758	2x13 Smooth Presswheel Side
4	530766	2x13 Peaked Presswheel
5	401042	Bearing
6		Hex Locknut 3/8"

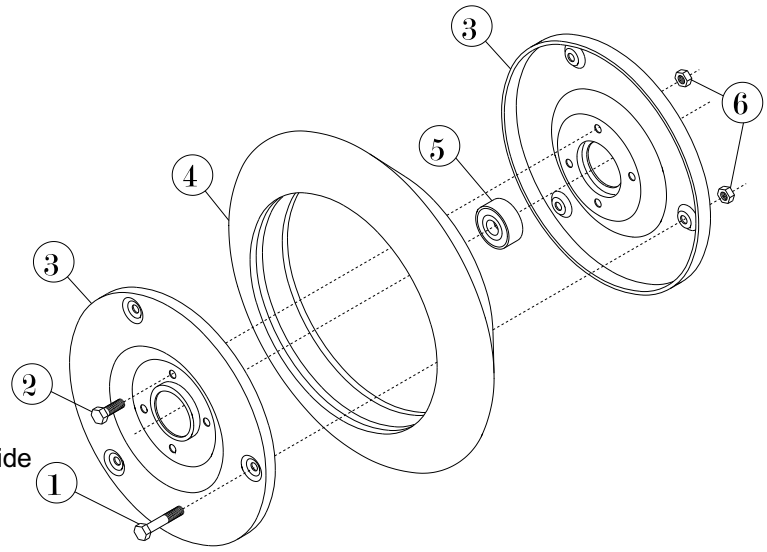

#530717 (Hammer)
2" x 13" w/Smooth Sides

Item	Part No.	Description
1		HHCS 3/8" x 1 5/8" Gr 5
2		HHCS 3/8" x 5/8" Gr 5
3	530758	2x13 Smooth Presswheel Side
4	530790	2x13 Presswheel
5	401042	Bearing
6		Hex Locknut 3/8"

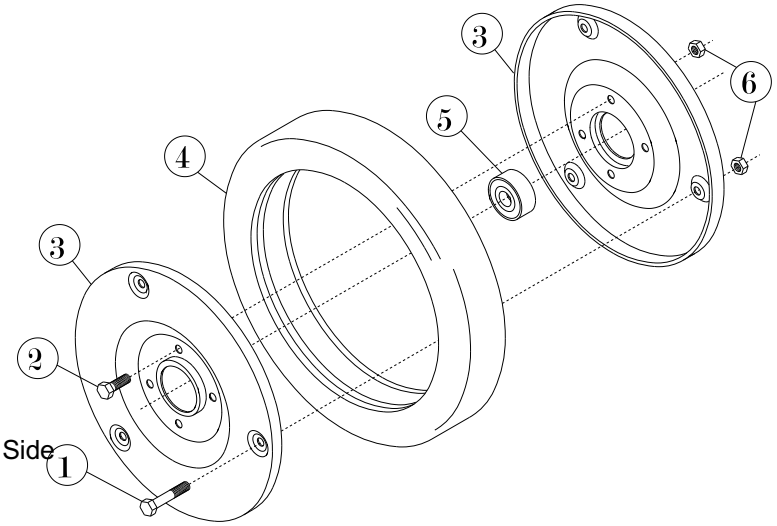

#846774 (Prior 1999)
3" x 14" V-Type

Item	Part No.	Description
1	02450500	HHCS 5/16" x 3" Gr 5
2	331611	Hex Nut Nylock 5/16"
3	401042	Bearing
4	530568	Presswheel 3" x 14" V-Type
5	951988	Presswheel Half w/Ring
6	951996	Presswheel Half w/o Ring

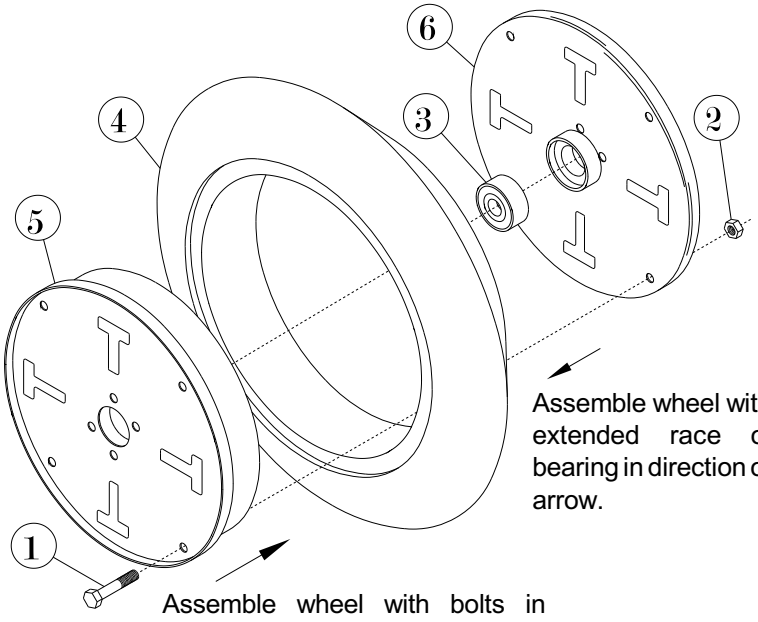

Assemble wheel with extended race of bearing in direction of arrow.

Assemble wheel with bolts in direction of arrow.

All Plant Feed Tubes

Item	Part No.	Description
1	604777	Clamp 1.375 x .162 (A-22)
2	571000	Upper Seed Tube- 21" (Long Openers & both ends of tool bars)
	571331	Upper Seed Tube- 20" (Short Openers unless on ends of tool bars)
3	872036	Bottom Tube Assembly (Long & Short Openers)

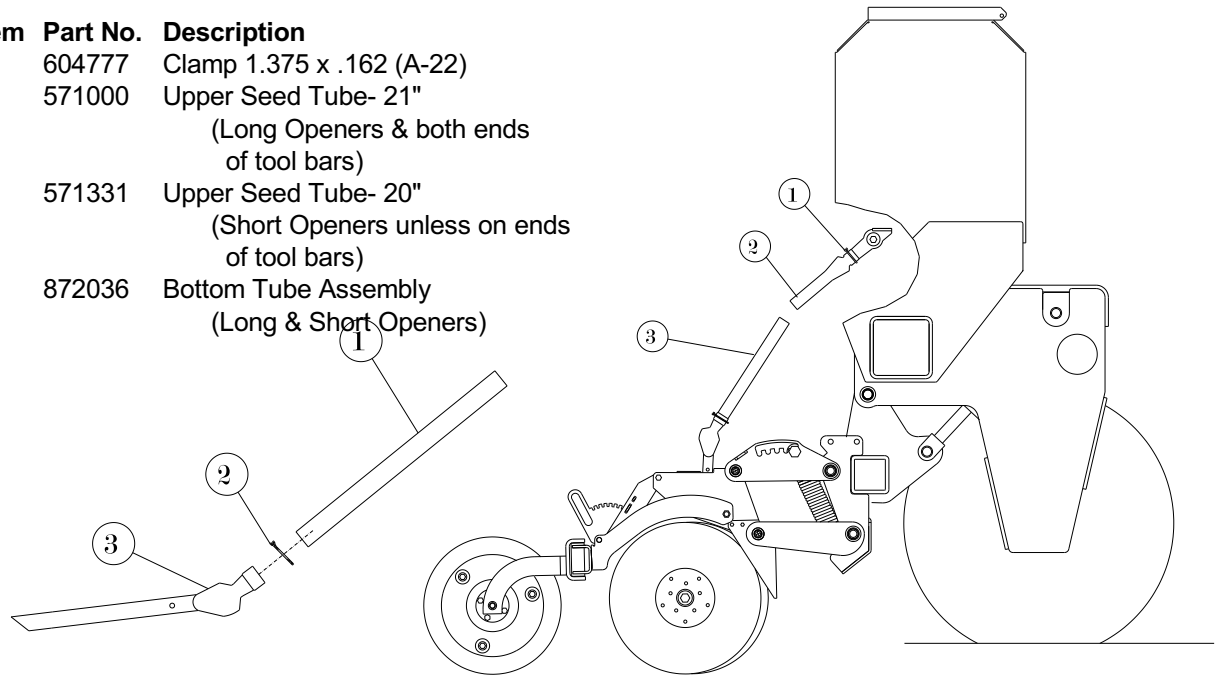

Bottom Tube Assembly #872036

Item	Part No.	Description
1	571323	Tube- 16"
2	603027	Clamp 1.625 x .172 (A-26)
3	571364	Feed Tube 14 5/8"

Min-Till Feed Tubes

#865709 Bottom Tube Assembly 25 1/4" (For Long Openers)

571190	Suction Hose 6 /12"
571125	Feed Tube 19 3/4"
603027	Hose Clamp

#865386 Bottom Tube Assembly 23 1/4" (For Short Openers)

570960	Suction Hose 4 /12"
571125	Feed Tube 19 3/4"
603027	Hose Clamp

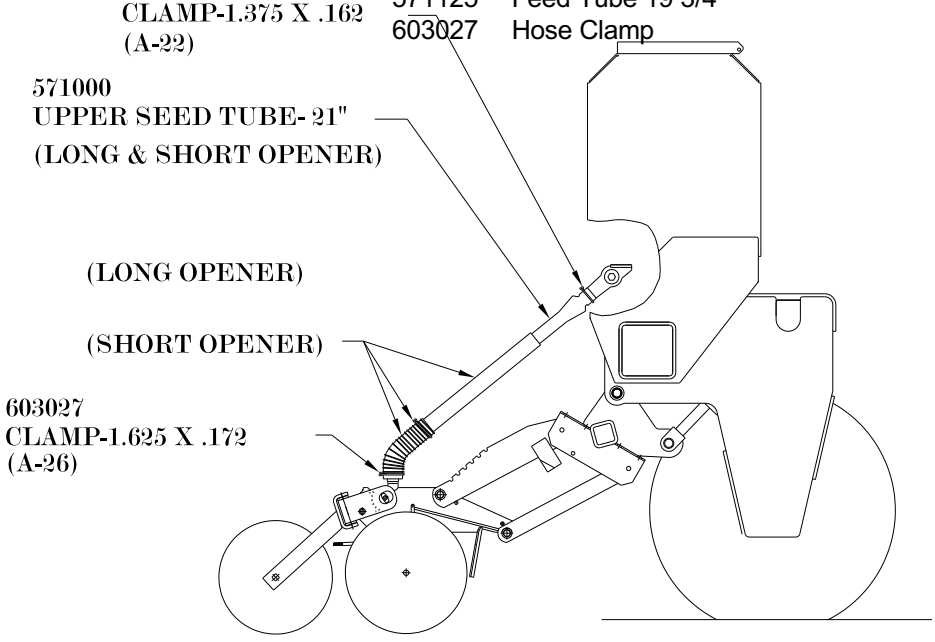

Fold Hydraulics

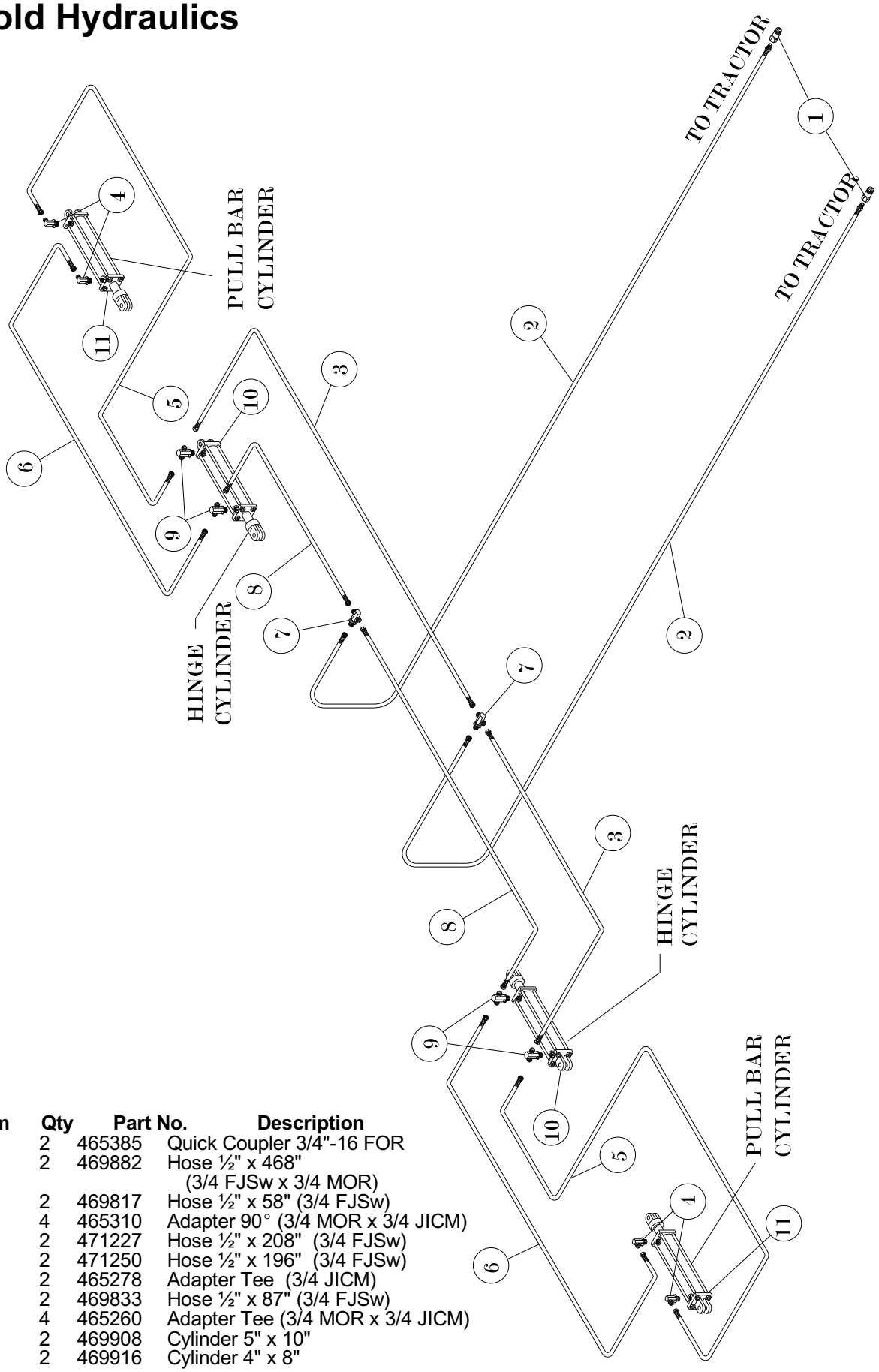

Item	Qty	Part No.	Description
1	2	465385	Quick Coupler 3/4"-16 FOR
2	2	469882	Hose ½" x 468" (3/4 FJSw x 3/4 MOR)
3	2	469817	Hose ½" x 58" (3/4 FJSw)
4	4	465310	Adapter 90° (3/4 MOR x 3/4 JICM)
5	2	471227	Hose ½" x 208" (3/4 FJSw)
6	2	471250	Hose ½" x 196" (3/4 FJSw)
7	2	465278	Adapter Tee (3/4 JICM)
8	2	469833	Hose ½" x 87" (3/4 FJSw)
9	4	465260	Adapter Tee (3/4 MOR x 3/4 JICM)
10	2	469908	Cylinder 5" x 10"
11	2	469916	Cylinder 4" x 8"

Wing Carrier Hydraulics

Item	Qty	Part No.	Description
1	2	465385	Quick Coupler 3/4"-16 FOR
2	2	469882	Hose ½" x 450" (3/4 FJSw x 3/4 MOR)
3	1	465104	Lock Valve
4	1	465591	Hose ½" x 132" (3/4 FJSw)
5	1	469833	Hose ½" x 87" (3/4 FJSw)
6	1	465229	Hose ½" x 100" (3/4 FJSw)
7	2	469908	Cylinder 5 x 10
8	4	465294	Adapter Str (3/4 MOR x 3/4 JICM)
9	1	465310	Adapter 90° (3/4 MOR x 3/4 JICM)
10	1	465260	Adapter Tee (3/4 MOR x 3/4 JICM)
11	1	466847	Hose ½" x 72" (3/4 FJSw)
12	1	471615	Adapter Res Tee (3/4 MOR x 3/4 JICM)
13	1	466862	Adapter Res 90° (3/4 MOR x 3/4 JICM)

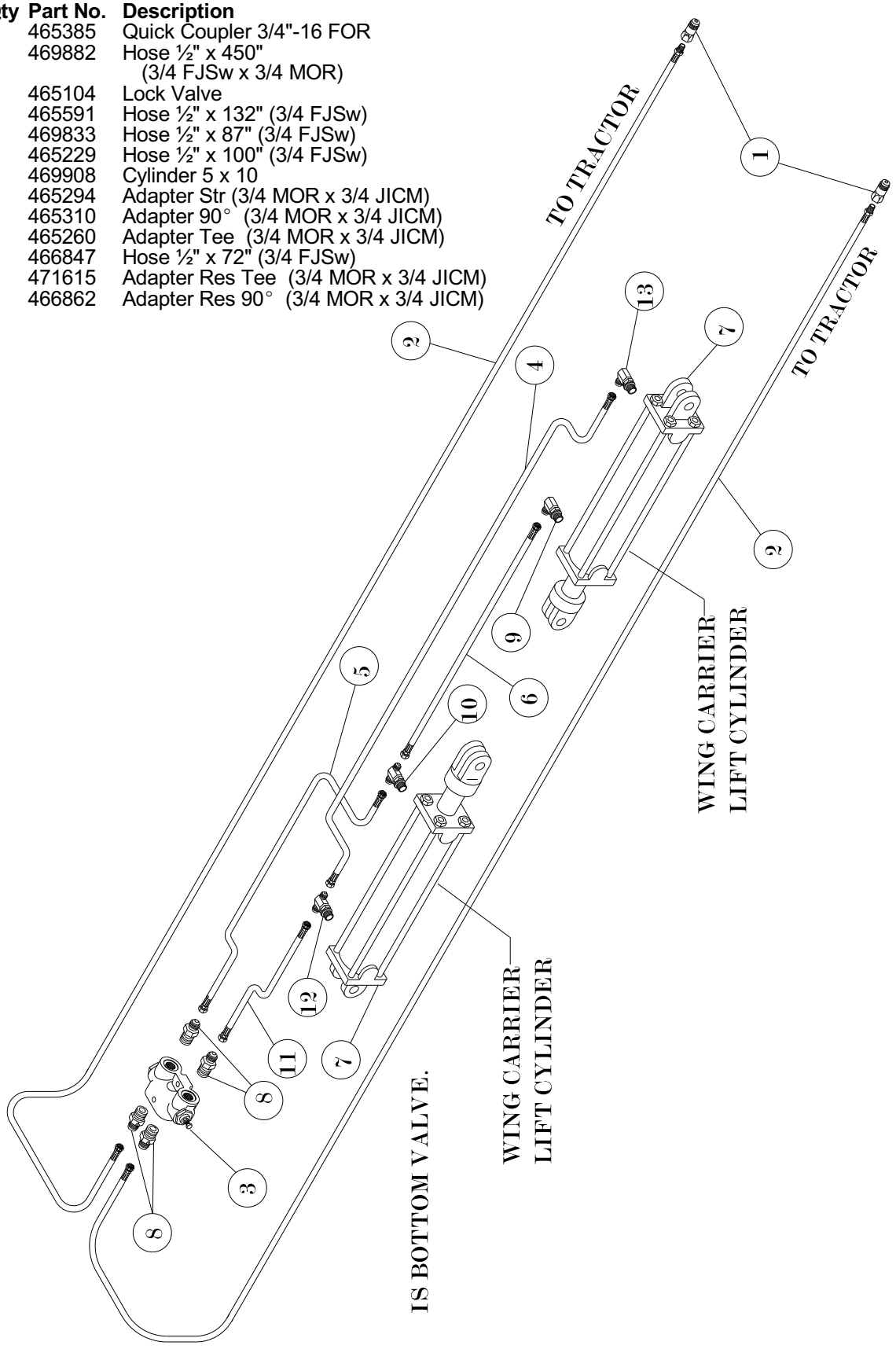

Tool Bar Hydraulics

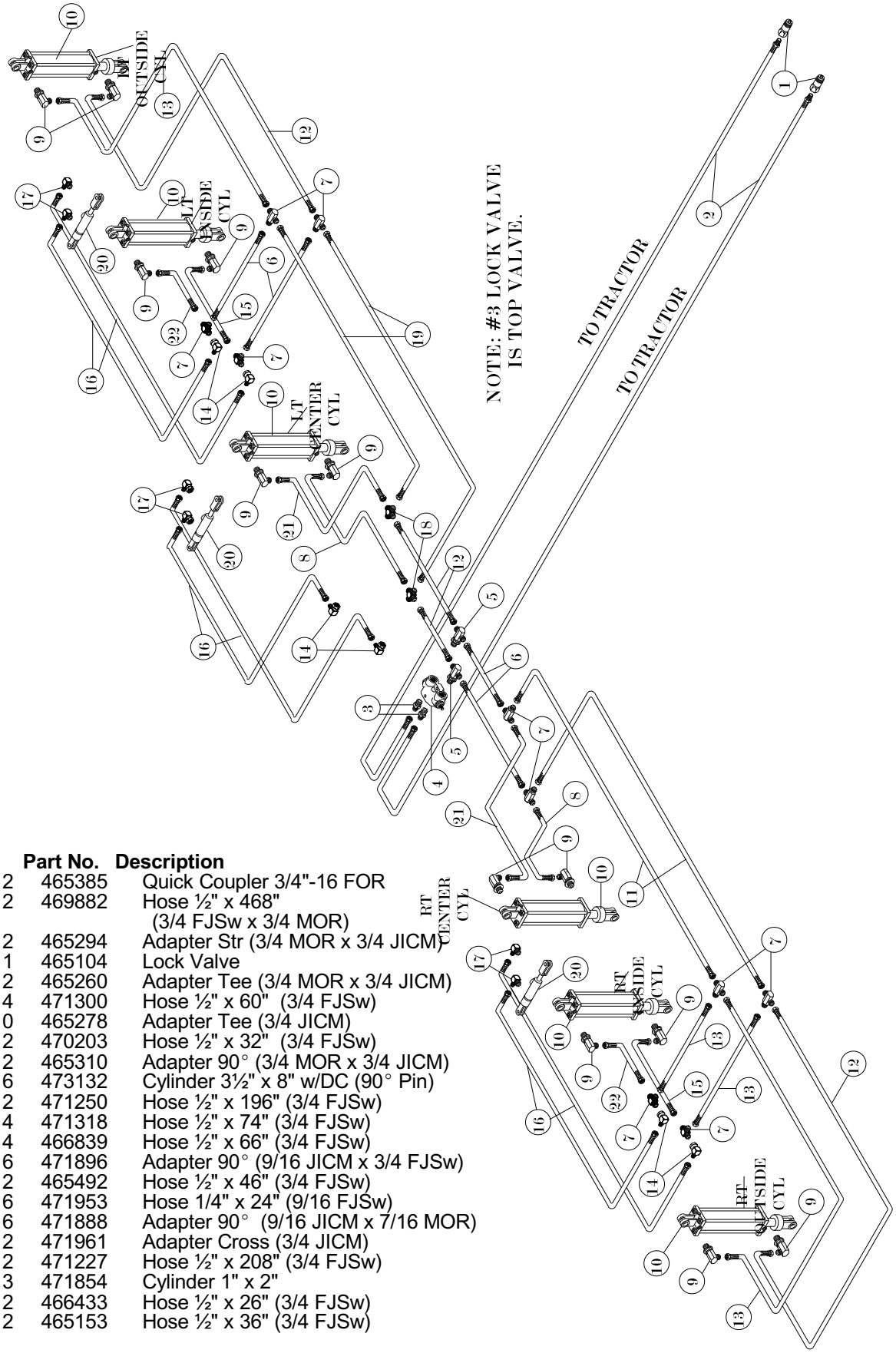

Item	Qty	Part No.	Description
1	2	465385	Quick Coupler 3/4"-16 FOR
2	2	469882	Hose ½" x 468" (3/4 FJSw x 3/4 MOR)
3	2	465294	Adapter Str (3/4 MOR x 3/4 JICM)
4	1	465104	Lock Valve
5	2	465260	Adapter Tee (3/4 MOR x 3/4 JICM)
6	4	471300	Hose ½" x 60" (3/4 FJSw)
7	10	465278	Adapter Tee (3/4 JICM)
8	2	470203	Hose ½" x 32" (3/4 FJSw)
9	12	465310	Adapter 90° (3/4 MOR x 3/4 JICM)
10	6	473132	Cylinder 3½" x 8" w/DC (90° Pin)
11	2	471250	Hose ½" x 196" (3/4 FJSw)
12	4	471318	Hose ½" x 74" (3/4 FJSw)
13	4	466839	Hose ½" x 66" (3/4 FJSw)
14	6	471896	Adapter 90° (9/16 JICM x 3/4 FJSw)
15	2	465492	Hose ½" x 46" (3/4 FJSw)
16	6	471953	Hose 1/4" x 24" (9/16 FJSw)
17	6	471888	Adapter 90° (9/16 JICM x 7/16 MOR)
18	2	471961	Adapter Cross (3/4 JICM)
19	2	471227	Hose ½" x 208" (3/4 FJSw)
20	3	471854	Cylinder 1" x 2"
21	2	466433	Hose ½" x 26" (3/4 FJSw)
22	2	465153	Hose ½" x 36" (3/4 FJSw)

Hydraulic Cylinders

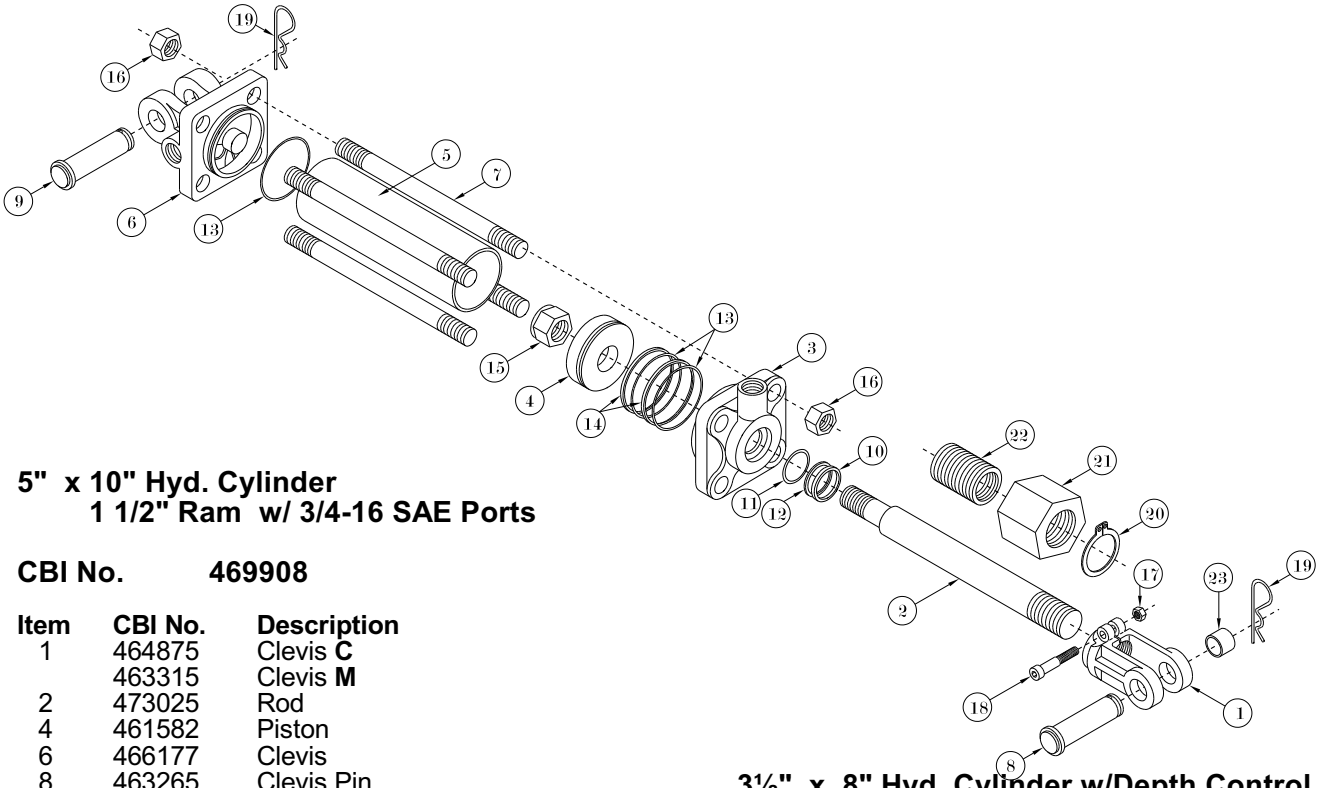

5" x 10" Hyd. Cylinder
1 1/2" Ram w/ 3/4-16 SAE Ports

CBI No. 469908

Item	CBI No.	Description
1	464875	Clevis **C**
	463315	Clevis **M**
2	473025	Rod
4	461582	Piston
6	466177	Clevis
8	463265	Clevis Pin
9	468447	Clevis Pin
10	460907	Rod Wiper
13	461533	O-ring
14	461590	Back-up
15	461608	Piston Nut
16	461459	Tie Rod Nut
17	460691	Clevis Nut
18	460477	Capscrew
19	460469	Cotter Pin
	461855	Seal Kit **C**

4" x 8" Hyd. Cylinder
1 1/4" Ram w/ 3/4-16 SAE Ports
CBI No. 469916

Item	CBI No.	Description
1	461095	Clevis
4	461269	Piston
5	461293	Tube
6	467134	Base Clevis
7	461384	Tie Rod
8	463133	Clevis Pin
9	463133	Clevis Pin
10	460329	Rod Wiper
13	461186	O-ring
14	461277	Back-up
15	461285	Piston Nut
16	461442	Tie Rod Nut
17	460691	Clevis Nut
18	460477	Capscrew
19	460469	Cotter Pin
	461830	Seal Kit

3½" x 8" Hyd. Cylinder w/Depth Control
1 1/4" Ram w/ 3/4-16 SAE Ports
90° to Pins

CBI No. 473132

Item	CBI No.	Description
1	461095	Clevis Rod Assembly
2	473140	Rod
3	473157	Head
4	464479	Piston
5	470526	Tube
7	467787	Tie Rod
8	463133	Clevis Pin
9	463133	Clevis Pin
10	460329	Rod Wiper
13	464446	O-ring
14	464487	Back-up
15	464495	Piston Nut
16	464537	Tie Rod Nut
17	460691	Clevis Nut
18	460477	Capscrew
20	463398	Retaining Ring
21	463380	Stop Collar Outside
22	461525	Stop Collar Inside
	473165	Seal Kit

1" x 2" Hyd. Drive Cylinder

CBI No. 471854

472043	Seal Kit

Hydraulic Valve Assembly

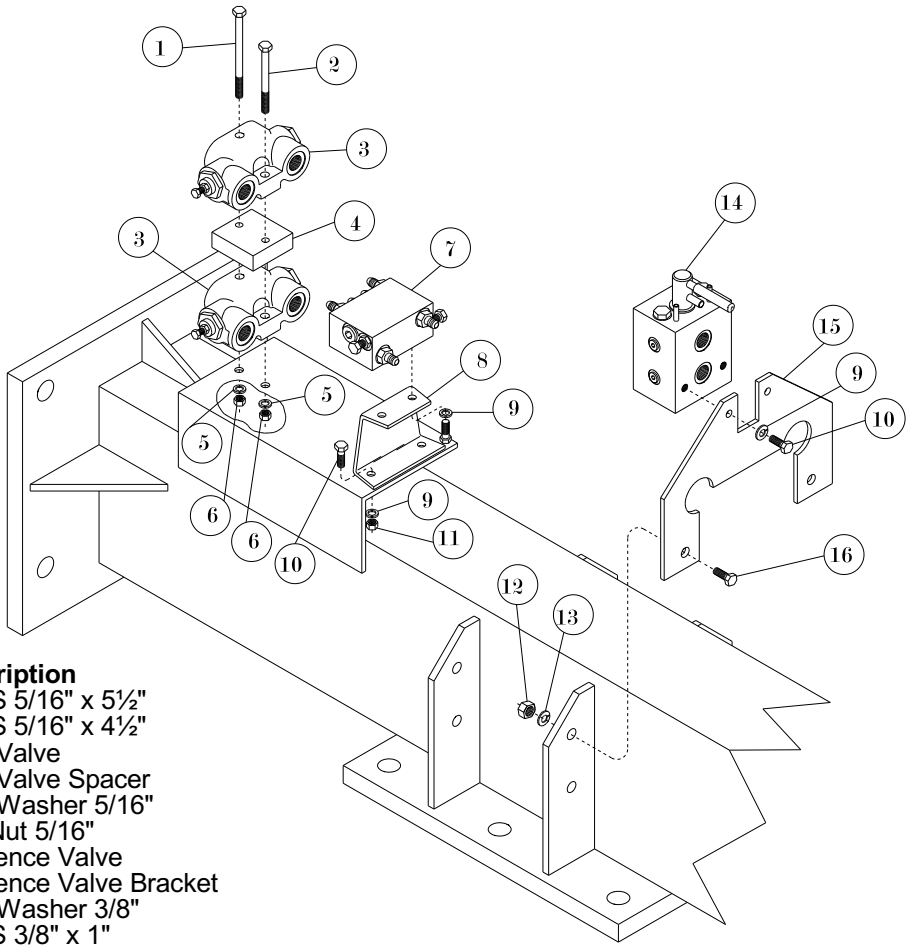

Item	Part No.	Description
1	337535	HHCS 5/16" x 5½"
2	333567	HHCS 5/16" x 4½"
3	465104	Lock Valve
4	217844	Lock Valve Spacer
5	330845	Lock Washer 5/16"
6	330811	Hex Nut 5/16"
7	469072	Sequence Valve
8	217836	Sequence Valve Bracket
9	330043	Lock Washer 3/8"
10	01017300	HHCS 3/8" x 1"
11	330035	Hex Nut 3/8"
12	330134	Hex Nut ½"
13	330142	Lock Washer ½"
14	470278	Double Selector Valve
15	217828	Double Selector Valve Bracket
16	01180900	HHCS ½" x 1 1/4"

4740 Marker

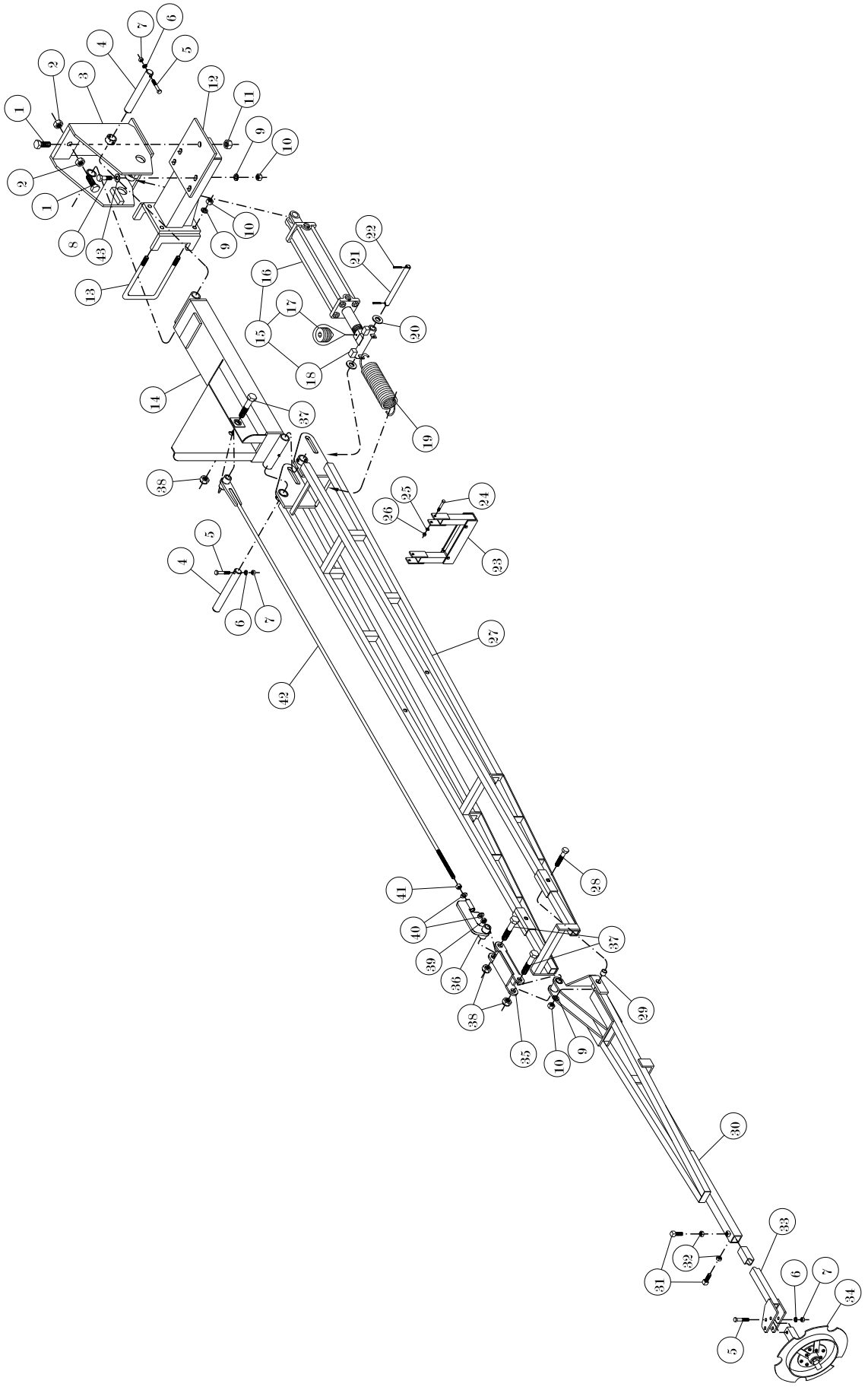
1
2
3
4
5
6
7
8
9
10
11
12
13
14
15
16
17
18
19
20
21
22
23
24
25
26
27
28
29
30
31
32
33
34
35
36
37
38
39
40
41
42
43

4740 Marker

Item	Qty	Part No.	Description
1	4	01172600	HHCS 1" x 2½"
2	4	332288	Jam Nut 1"
3	1	938407	Marker Base Mt Bracket Lt
	1	938399	Marker Base Mt Bracket Rt
4	4	306282	Pivot Pin 1½" x 11"
5	6	334946	HHCS ½" x 3"
6	6	330142	Lock Washer ½"
7	6	330134	Hex Nut ½"
8	8	335174	HHCS 3/4" x 2 ½"
9	20	330332	Lock Washer 3/4"
10	20	330290	Hex Nut 3/4"
11	2	330381	Hex Nut 1"
12	1	963207	Marker Mount Left
	1	963199	Marker Mount Right
13	4	337162	U-bolt 3/4" x 7 x 11
14	1	966267	Base Arm Left
	1	966275	Base Arm Right
15	2	859165	Cylinder Assembly (Includes #16-#18)
16	2	468173	Cylinder 3 x 20
17	2	334516	Set Screw 1/4-28 x 1/4
18	2	938332	Cylinder Bracket
19	2	500173	Spring .148 x 3"
20	4	330407	Flat Washer 1"
21	2	306621	Cylinder Pin 1" x 10 3/4"
22	4	330662	Roll Pin 5/16" x 1 3/4"
23	2	867804	Marker Arm Rest
24	4	331884	HHCS 3/8" x 2½"
25	4	330043	Lock Washer 3/8"
26	4	330035	Hex Nut 3/8"
27	1	938290	Ladder
28	4	01110600	HHCS 3/4" x 4"
29	4	142646	Marker Arm Spacer
30	1	966085	Marker Arm
31	4	331223	Set Screw 5/8" x 1 3/4" Square Head
32	4	331538	Jam Nut 5/8"
33	1	954685	Adjustable Marker Arm
34	2	861450	Marker Blade Assembly
35	1	966077	Marker Pivot
36	1	966044	Turnbuckle Adjustment
37	6	332809	HHCS 1" x 5"
38	6	330597	Nylock Nut 1"
39	2	01572700	Nylock Nut 5/8"
40	4	330183	Flat Washer 5/8"
41	2	330571	Hex Nut 5/8"
42	2	966069	Turnbuckle Rod
43	8	330340	Flat Washer 3/4"

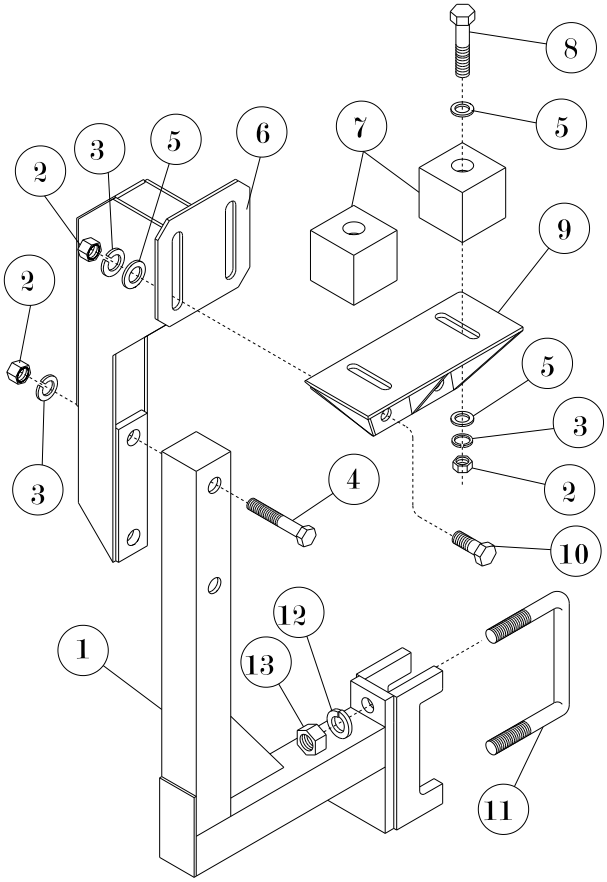

Marker Carrier

Item	Part No.	Description
1	960294	Marker Carrier Base
2	330134	Hex Nut ½"
3	330142	Lock Washer ½"
4	330100	HHCS ½" x 4½"
5	330159	Flat Washer ½"
6	963215	Marker Carrier
7	10746600	Bumper 3½" x 3½" x 3"
8	334946	HHCS ½" x 3"
9	960385	Marker Carrier Bumper
10	01147800	HHCS ½" x 1½"
11	337162	U-bolt 3/4" x 7" x 11"
12	330332	Lock Washer 3/4"
13	330290	Hex Nut 3/4"

Tri-Fold Marker
Mounting & Assembly Instructions

Remove contents of hardware box and sort parts for identification. *Refer to drawing lay-out.* Using the 3/4" x 7" x 11" U-bolts, 3/4" lock washers and hex nuts, install marker mount to the 7 x 7 frame tube at the end of each wing frames.

Bolt marker base mount bracket ---right on the right side of the drill, and left on the left side of the drill--- using one (1) 1" x 2½" HHCS with hex nut and four (4) 3/4" x 2½" HHCS with flat washers, lock washers, and hex nuts. To determine left and right, stand behind drill looking to the tractor. To your right is the right side of drill, and to your left, the left side of drill.

Mount left marker base arm and right marker base arm to marker base mount brackets using base arm pivot pins (1½" x 11") *Refer to drawing.* Secure pins with ½" x 3" bolts, lock washers and hex nuts. (Check part numbers to insure correct side).

Attach the 3 x 20 hydraulic cylinder to the marker base mounts using the pin provided with the cylinders.

Install 1" x 2½" stop bolts with two (2) hex jam nuts in the top holes of the marker base. Using the other 1½" x 11" pivot pins, mount ladder sections to the marker base arms and secure with 1/2" x 3" bolts, lock washers, and hex nuts. Remove the cylinder port plugs and extend hydraulic cylinder rams out to align cylinder brackets with slotted holes in ladder sections and connect with cylinder bracket pins (1" x 10 3/4"), Use a 1" flat washer on the outside of slotted area when installing pins. *Refer to drawing.*

Attach spring from cylinder bracket to the cross rod located by the slotted holes on the ladder section. This must be installed for markers to work properly.

Install the marker arms in the first hole on the ladder sections using 3/4" x 4" bolts, marker arm spacer bushings *(Refer to drawing)*, lock washer, and hex nuts.

Attach marker pivot to arm using 1" x 5" bolts and nylock nuts. Bolt the turnbuckle end adjustment to pivot with 1" x 5" bolts and nylock nuts.

On the marker base arms --right and left, install marker adjustment rod using 1" x 5" bolt and nylock nut. Attach rod to the turnbuckle end adjustment using one (1) 5/8" hex nylock nut and one (1) 5/8" flat washer on outside and one (1) ½" hex nut and 5/8" flat washer on the inside. Fold marker up and back down to make sure marker blade does not hit the ground. The marker should be adjusted at this point, but if the marker arm does not start out when the ladder starts down, adjustment will have to be made on the turnbuckle end.

Attach adjustable marker stop assemblies to bottom of ladder sections using 3/8" x 2½" bolt with lock washers, and hex nuts. DO NOT TIGHTEN COMPLETELY AT THIS TIME. Marker stops will need to be adjusted later to keep marker blades from hitting ladders. *Refer to drawing.*

Slide the adjustable marker arms into the end of the ladder sections and secure with 5/8" x 1 3/4" set screws and hex jam nuts. Finally, bolt the marker blade assemblies to the adjustable marker arms using ½" x 3" bolts with lock washers, and hex nuts. TIGHTEN BOLTS AT THIS STEP. Angle settings will be dependent on field conditions and the amount of furrow desired. Measure distance as required, and set adjustable marker arms to proper positions.

For assembly of hydraulics, refer to hydraulic sections in this owner's manual. After hydraulics are complete, raise markers slowly to fill with oil. Sequence several times to eliminate air in the system. Be sure to check for leaks in the system. Adjust marker stops so blades do not hit ladders and tighten.

Mount marker carrier on inside end of wing frame with one (1) 3/4" x 7" x 11" u-bolt with 3/4" lock washers and hex nuts. DO NOT TIGHTEN this u-bolt at this time. Bolt the marker carrier to the marker carrier base using two (2) 1/2" x 4 1/2" HHCS with 1/2" lock washers and hex nuts. These bolts can be tightened now. Attach the marker carrier bumper to the marker carrier using four (4) 1/2" x 1 1/2" HHCS with 1/2" flat washers, lock washers, and hex nuts. DO NOT TIGHTEN at this time. Bolt two (2) bumpers to marker carrier bumper with two (2) 1/2" x 3" HHCS with 1/2" flat washers, lock washers, and hex nuts. DO NOT TIGHTEN. With marker folded in transport position, slide marker carrier along wing frame tube until bumpers are located under cross tube of marker ladder. Tighten 3/4" x 7" x 11" u-bolt at this time. Move marker bumper up so that bumpers are carrying the weight of the marker arms. The cross tube at the end of the marker ladder should be resting on the bumpers. Tighten the bolts holding the bumpers and the bumper carrier at this time.

Single Marker Hydraulics

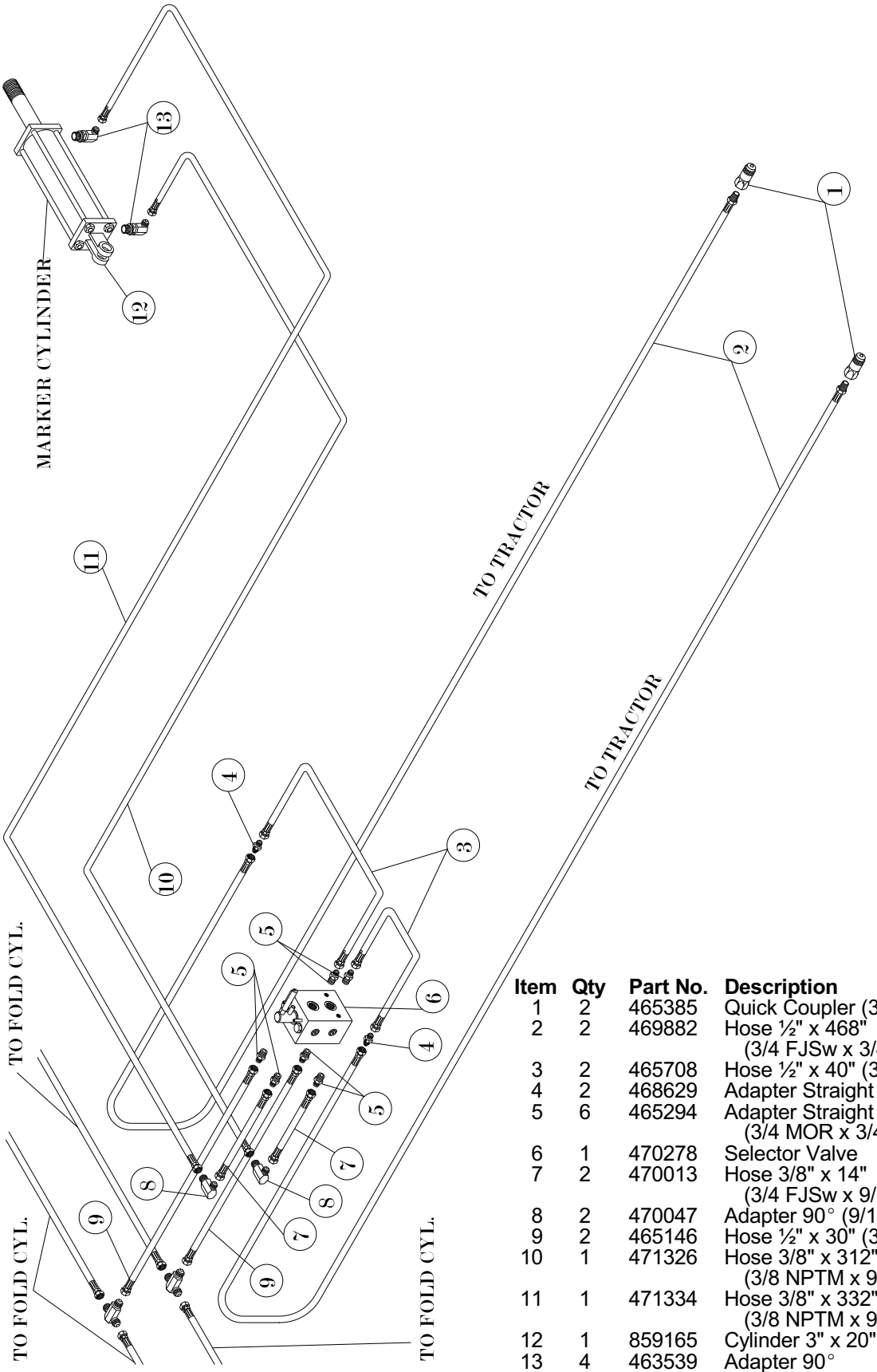

Item	Qty	Part No.	Description
1	2	465385	Quick Coupler (3/4"-16 FOR)
2	2	469882	Hose ½" x 468" (3/4 FJSw x 3/4 MOR)
3	2	465708	Hose ½" x 40" (3/4 FJSw)
4	2	468629	Adapter Straight (3/4 JICM)
5	6	465294	Adapter Straight (3/4 MOR x 3/4 JICM)
6	1	470278	Selector Valve
7	2	470013	Hose 3/8" x 14" (3/4 FJSw x 9/16 FJSw)
8	2	470047	Adapter 90° (9/16 JICM)
9	2	465146	Hose ½" x 30" (3/4 FJSw)
10	1	471326	Hose 3/8" x 312" (3/8 NPTM x 9/16 FJSw)
11	1	471334	Hose 3/8" x 332" (3/8 NPTM x 9/16 FJSw)
12	1	859165	Cylinder 3" x 20"
13	4	463539	Adapter 90° (½NPTM x 3/8NPTFSw)

Double Marker Hydraulics

Item	Qty	Part No.	Description
1	2	465385	Quick Coupler (3/4"-16 FOR)
2	2	469882	Hose ½" x 468" (3/4 FJSw x 3/4 MOR)
3	2	465708	Hose ½" x 40" (3/4 FJSw)
4	2	468629	Adapter Straight (3/4 JICM)
5	1	465294	Adapter Straight (3/4 MOR x 3/4 JICM)
6	1	470278	Selector Valve
7	2	470013	Hose 3/8" x 12" (3/4 FJSw x 9/16 FJSw)
8	4	469049	Adapter 90
9	2	465146	Hose ½" x 30" (3/4 FJSw)
10	1	469072	Sequence Valve
11	2	471326	Hose 3/8" x 312" (3/8 NPTM x 9/16 FJSw)
12	2	471334	Hose 3/8" x 332" (3/8 NPTM x 9/16 FJSw)
13	2	859165	Cylinder Assembly 3 x 20
14	2	463539	Adapter 90 (½ NPTM x 3/8 FPSw)

Double Marker Hydraulics

Item	Qty	Part No.	Description
1	2	465385	Quick Coupler (3/4"-16 FOR)
2	2	469882	Hose ½" x 468" (3/4 FJSw x 3/4 MOR)
3	2	465708	Hose ½" x 40" (3/4 FJSw)
4	2	468629	Adapter Straight (3/4 JICM)
5	6	465294	Adapter Straight (3/4 MOR x 3/4 JICM)
6	1	470278	Selector Valve
7	2	470013	Hose 3/8" x 12" (3/4 FJSw x 9/16 FJSw)
8	4	469049	Adapter 90° (9/16 JICM x 9/16 FJSw)
9	2	465146	Hose ½" x 30" (3/4 FJSw)
10	1	469072	Sequence Valve
11	2	471326	Hose 3/8" x 312" (3/8 NPTM x 9/16 FJSw)
12	2	471334	Hose 3/8" x 332" (3/8 NPTM x 9/16 FJSw)
13	2	859165	Cylinder Assembly 3 x 20
14	4	463539	Adapter 90° (½ NPTM x 3/8 FPSw)

Sequence Valve Hydraulics

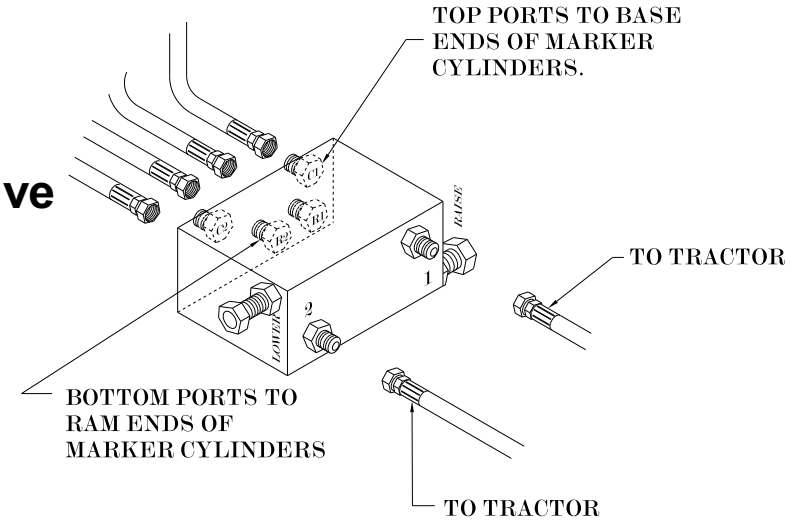

Marker Blade Assembly

861450

Item	Part No.	Description
1	956086	Marker Angle Adjusting Tube
2	330571	Hex Nut 5/8"
	330878	Lock Washer 5/8"
3	330183	Flat Washer 5/8"
4	400747	Neoprene Dust Seal
5	144865	Bushing
6	335448	HHCS 5/16" x 1 1/2" Gr 5
7	01144500	HHCS 5/16" x 3/4" Gr 5
8	501437	16" Notched Blade 4MM
9	633891	Bearing & Flange Assy
	551200	Flange Only
	401042	Bearing Only (Qty. 2)
10	330845	Lock Washer 5/16"
11	330811	Hex Nut 5/16"
12	923631	Bushing
13	02274900	HHCS 5/8" x 5" Gr 5
14	928564	Depth Band
15	330852	Flat Washer 5/16"

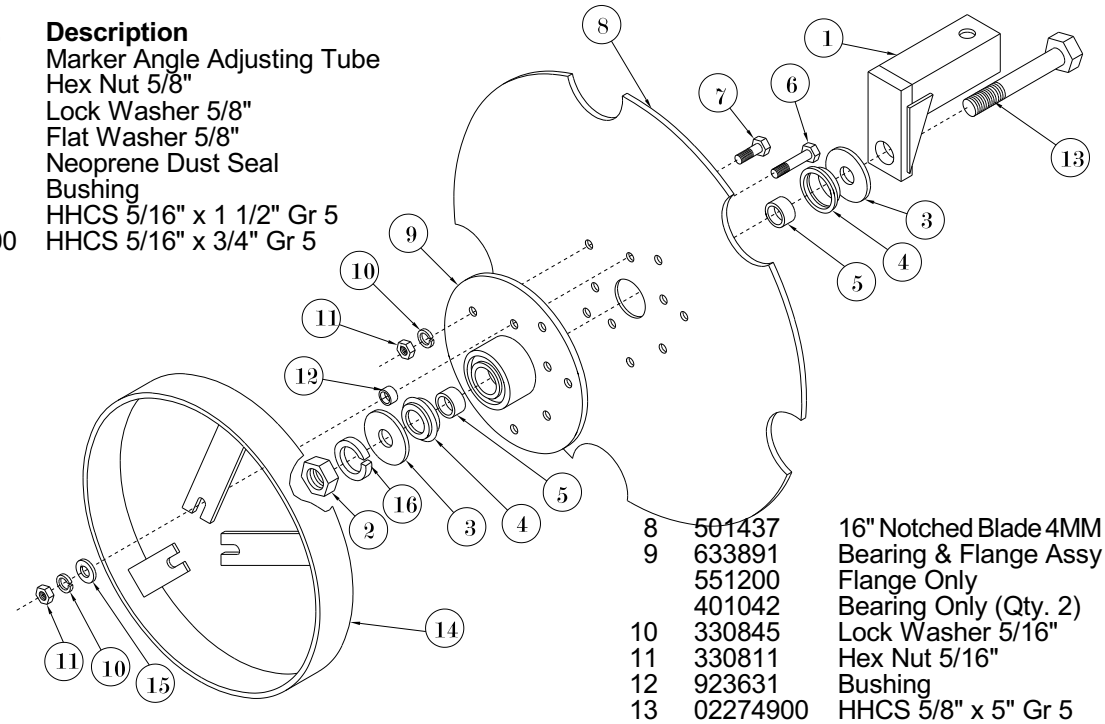

Marker Cylinder

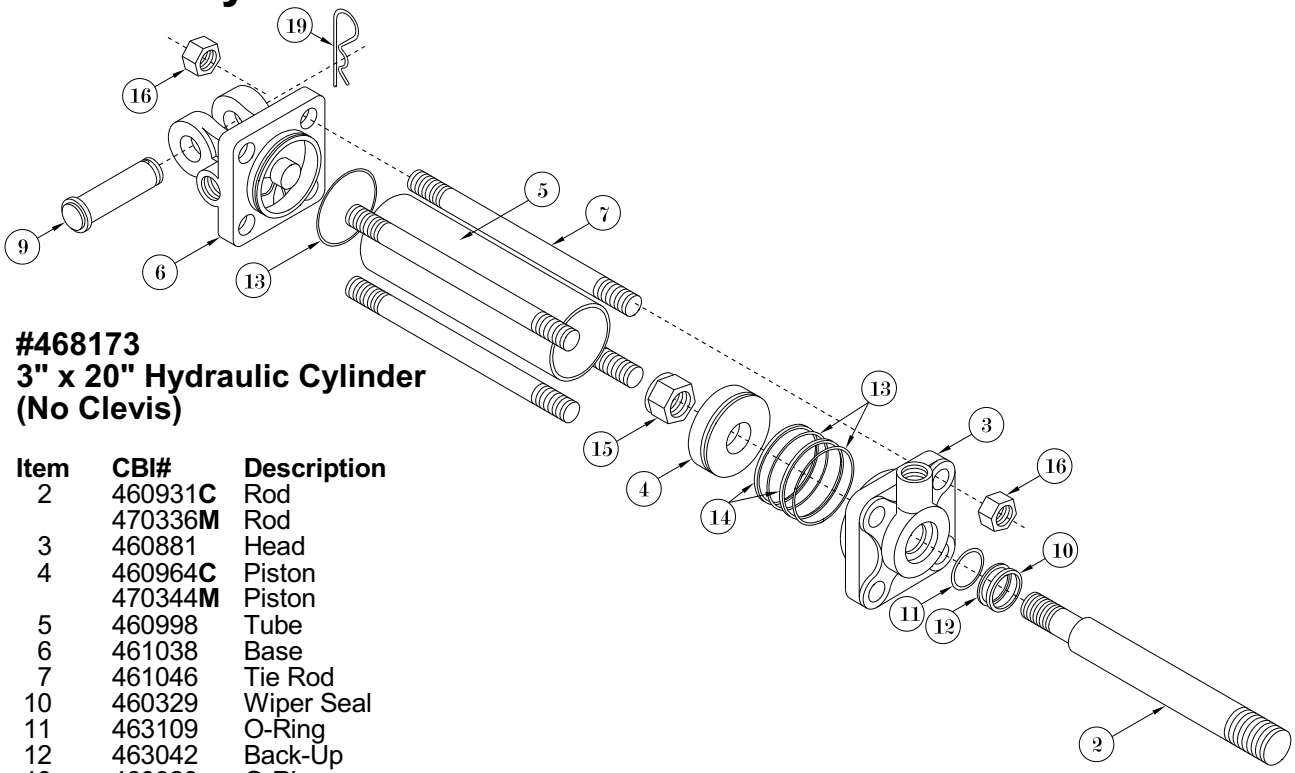

#468173
3" x 20" Hydraulic Cylinder
(No Clevis)

Item	CBI#	Description
2	460931**C**	Rod
	470336**M**	Rod
3	460881	Head
4	460964**C**	Piston
	470344**M**	Piston
5	460998	Tube
6	461038	Base
7	461046	Tie Rod
10	460329	Wiper Seal
11	463109	O-Ring
12	463042	Back-Up
13	460923	O-Ring
14	460980	Back-Up
15	460394**C**	Piston Nut
	461285**M**	Piston Nut
16	460972	Tie Rod Nut
	461079	Seal Kit

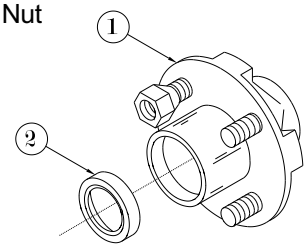

4 Bolt Hub

w/seals both sides
#551283

Item	Part No.	Description
1	550129	4 Bolt Hub Complete
2	400374	Dust Seal

4 Bolt Hub

#550129

Item	Part No.	Description
1	400374	Dust Seal
2	400382	Bearing Cone
3	400390	Bearing Cup (Pressed in Hub)
4	550129	4 Bolt Hub Complete
	550434	4 Bolt Hub w/cups only
5	330472	Spindle Nut
6	330480	Spindle Washer
7	332775	Cotter Pin
8	600338	Dust Cap
9	331827	Lug Nut

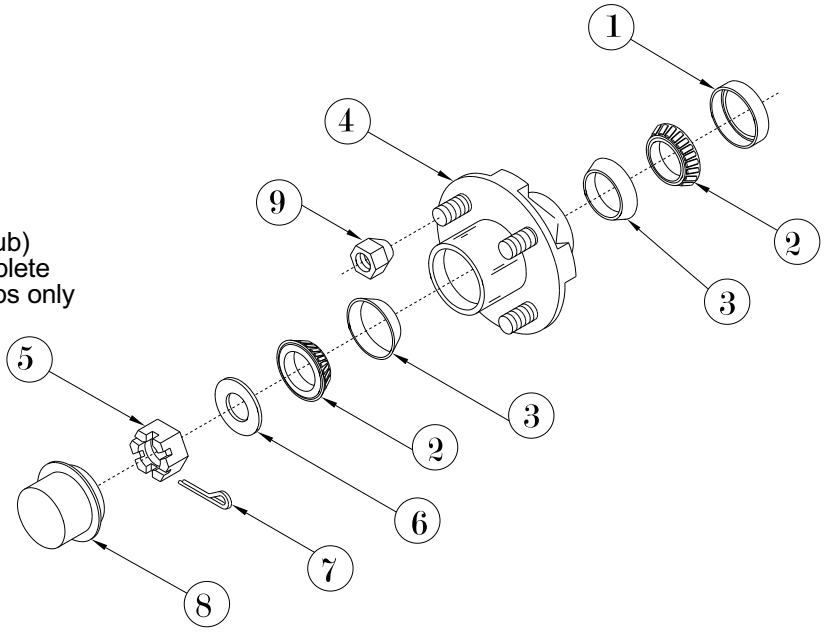

4700 Lighting System
(Center Section Only)

NOTE: To determine left and right, stand behind drill looking to the the tractor. Your right is to the right and your left is to the left of the drill.

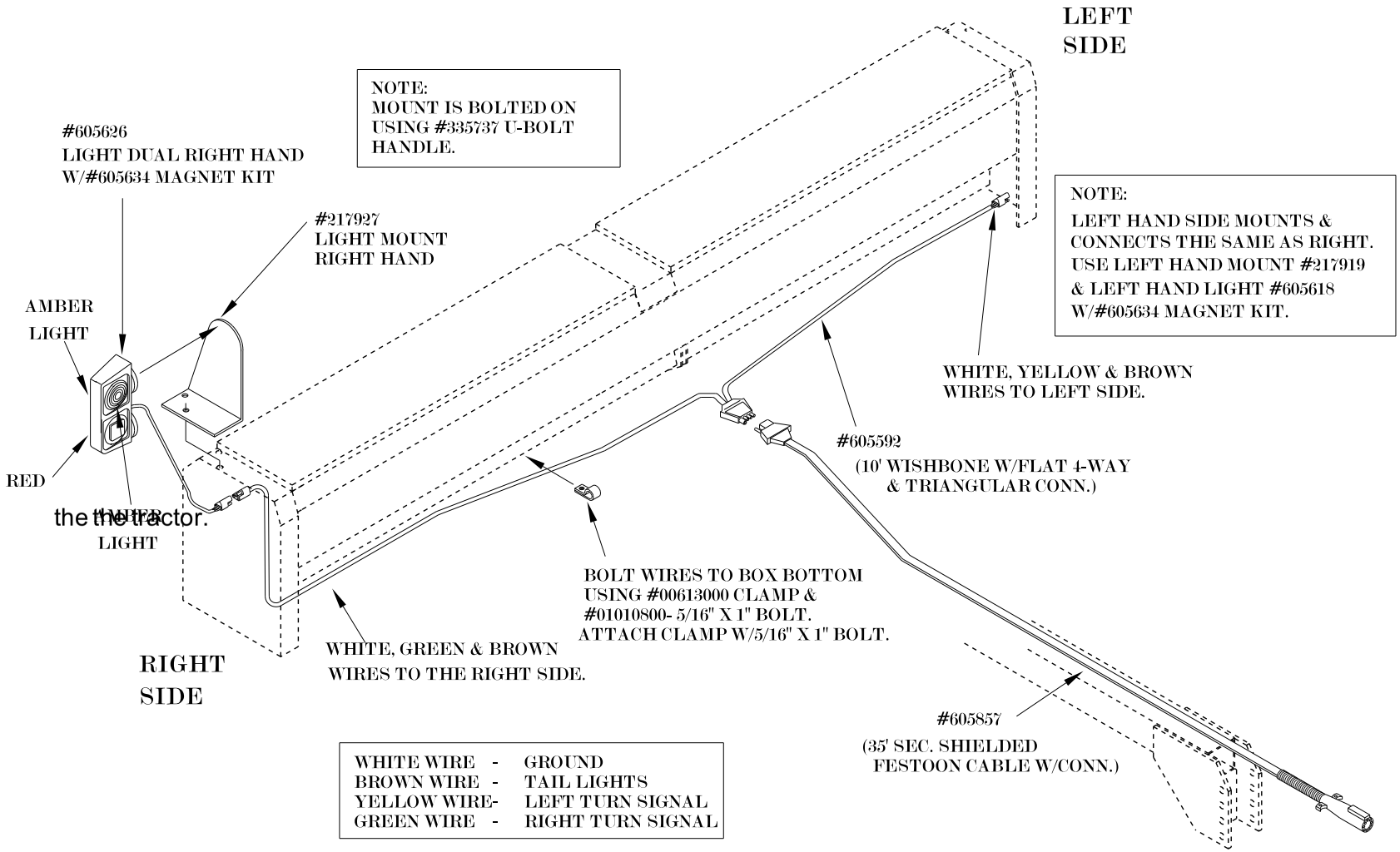

4740 Shaft & Bin Monitor System

For Micro-Trak service and support, call 800-328-9613.

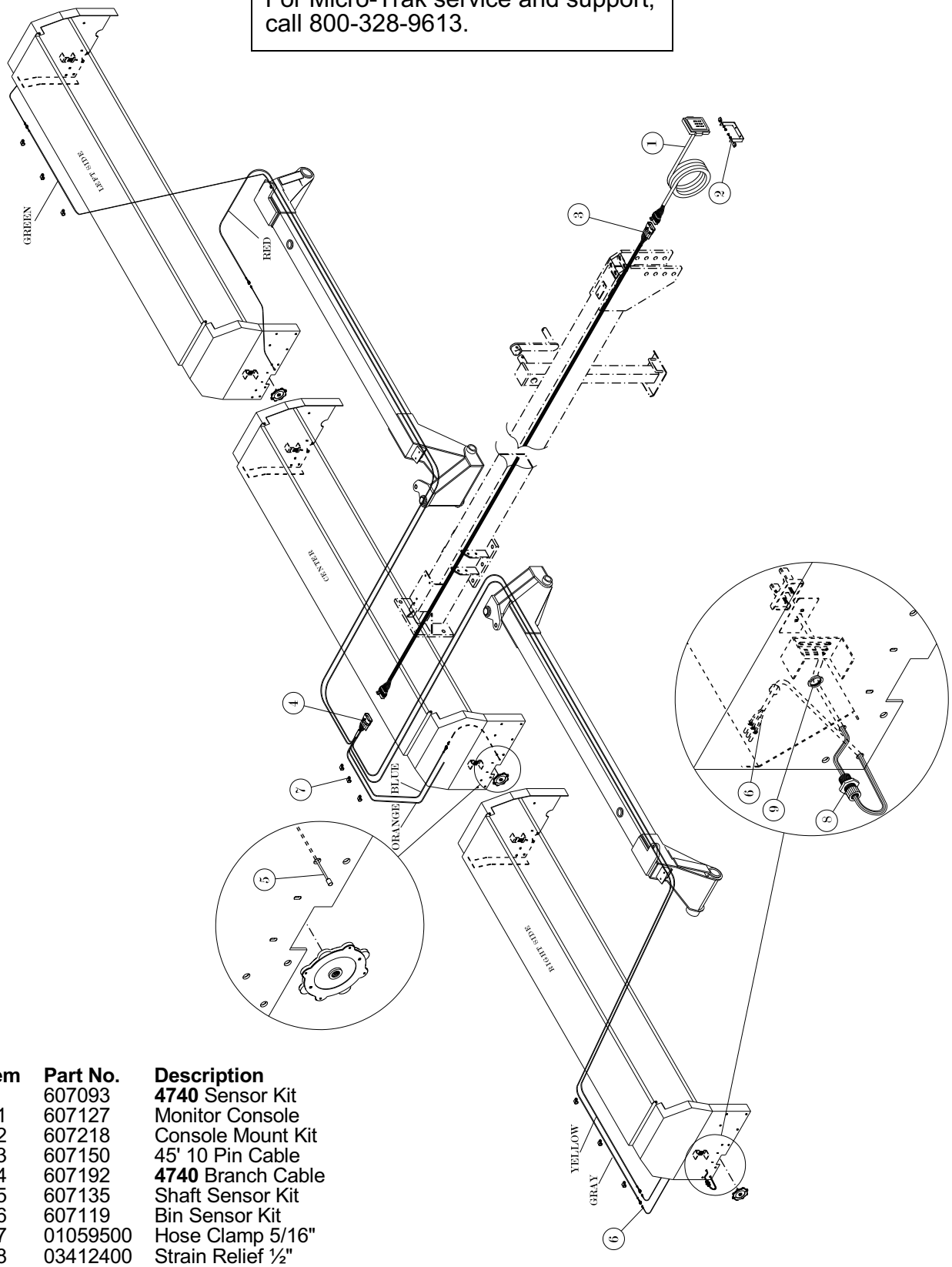

Item	Part No.	Description
	607093	**4740** Sensor Kit
1	607127	Monitor Console
2	607218	Console Mount Kit
3	607150	45' 10 Pin Cable
4	607192	**4740** Branch Cable
5	607135	Shaft Sensor Kit
6	607119	Bin Sensor Kit
7	01059500	Hose Clamp 5/16"
8	03412400	Strain Relief ½"
9	01076900	Nut ½" NPT Conduit Lock

4740
Fertilizer Unit

Fertilizer Feed Shaft Speed

Speed is determined by sprocket combinations. There are three (3) different speeds available in the fertilizer gear box along with six (6) speeds on the drive ends of the drill. See pages 88 and 89.

- Use a slow speed combination whenever possible for maximum efficiency and to minimize wear.
- Use a fast speed combination for drilling larger quantities.

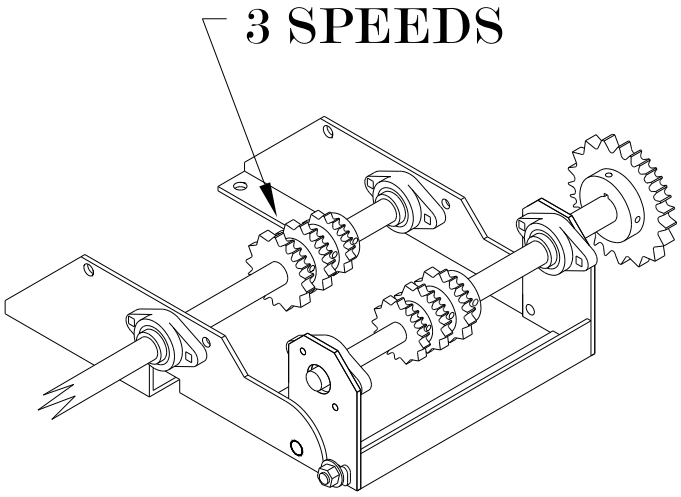

Fertilizer Drive Settings

The different types of fertilizer you apply will all have different delivery rates. Samples need to be caught to determine your particular material's delivery rate per rotor revolution in ounces per revolution.

To determine your rate, see page 89 and use example with your delivered ounces per 10 revolutions to find your rate column.

Determine how many pounds per acre you wish to apply and then find it on the chart page. Move over to the sprockets **A** through **F** on the same line to find the sprockets you need to apply the poundage you have selected. Locations of these sprockets can be found on page 88.

NOTE: When you are not distributing fertilizer, remove the chain between the 14 tooth sprocket **A** and the 40 tooth sprocket **B**.

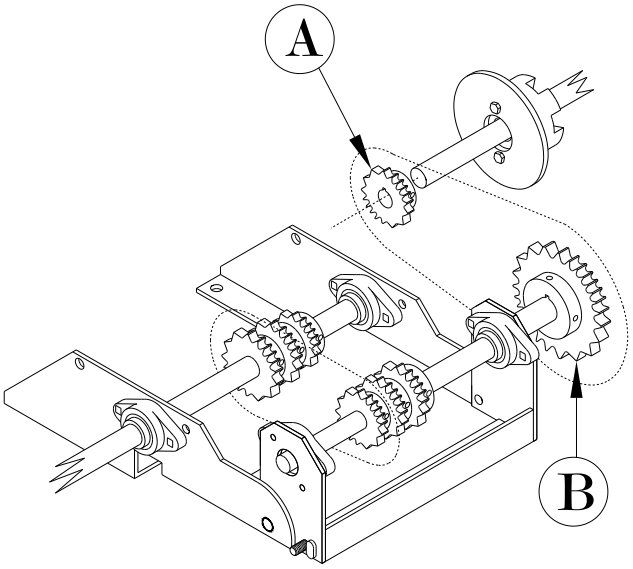

Cleaning Fertilizer Box

- Release all door latches **A** to drop both bottom doors **B** as shown.
- Clean out fertilizer through clean out holes **C**.
- Re-latch fertilizer doors.

IMPORTANT:
If drill is not used for several days, empty and clean out thoroughly. Fertilizer can corrode. Coat the box with diesel fuel but do not allow fuel to come in contact with the rubber seed tubes.

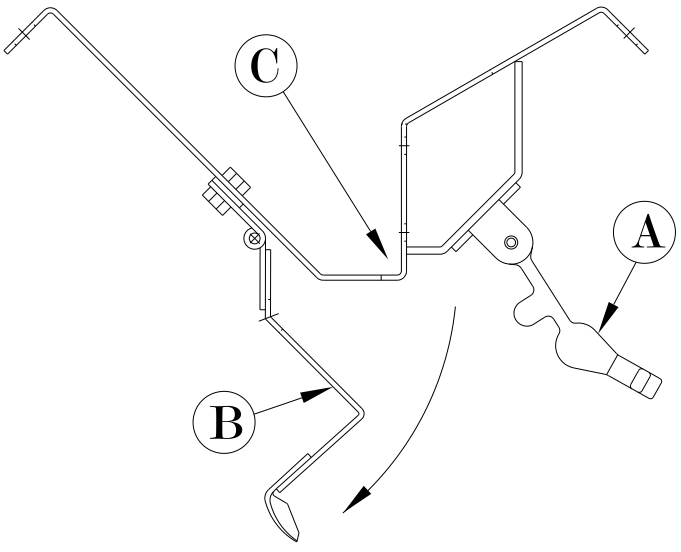

Fertilizer Unit Storage



CAUTION:

Be careful when using diesel fuel so that it does not ignite. Serious injury or death to you or others can result. Use only in well ventilated areas away from any sparks or flames.

IMPORTANT:

DO NOT allow diesel fuel (or any other petroleum product) to come in contact with the rubber tubes as it will cause deterioration.

1. Locate a flat level surface to store drill, then follow safe detaching procedures.
2. Store in transport position with lift cylinder lockouts in place.
3. If setting drill on ground, place a wood board under openers so that openers do not penetrate the ground. Lower openers and remove pressure from hydraulic system.
4. Coat opener disks with oil or grease. Then lower on to board for storage.
5. Open the feed cups to their largest or wide open setting. Jack the drill up and rotate the drive wheel to remove any material left in the cup rotors.
6. Paint all bare metal and rust spots. Matching paint can be ordered from your local CrustBuster dealer.
7. Spray all moving parts with diesel fuel or lubricating oil. Move adjuster lever back and forth while spraying. Spray each feed cup, inside and outside. Work the adjustment levers back and forth while spraying. The cost of the fuel or oil is insignificant, when the alternative is considered.
8. For drills that have used fertilizer and/or treated seed (both highly corrosive materials), coat the entire box, inside and outside, with diesel fuel. DO NOT allow fuel to contact rubber seed tubes.
9. Lubricate the drill. See lubrication, maintenance, and service page.
10. Clean chains with diesel fuel. Apply new oil before storing the drill.
11. For row markers, if drill is stored with the cylinder rod extended, apply light coat of grease to exposed area of rod

4740 Sprocket Locations
Fertilizer Unit

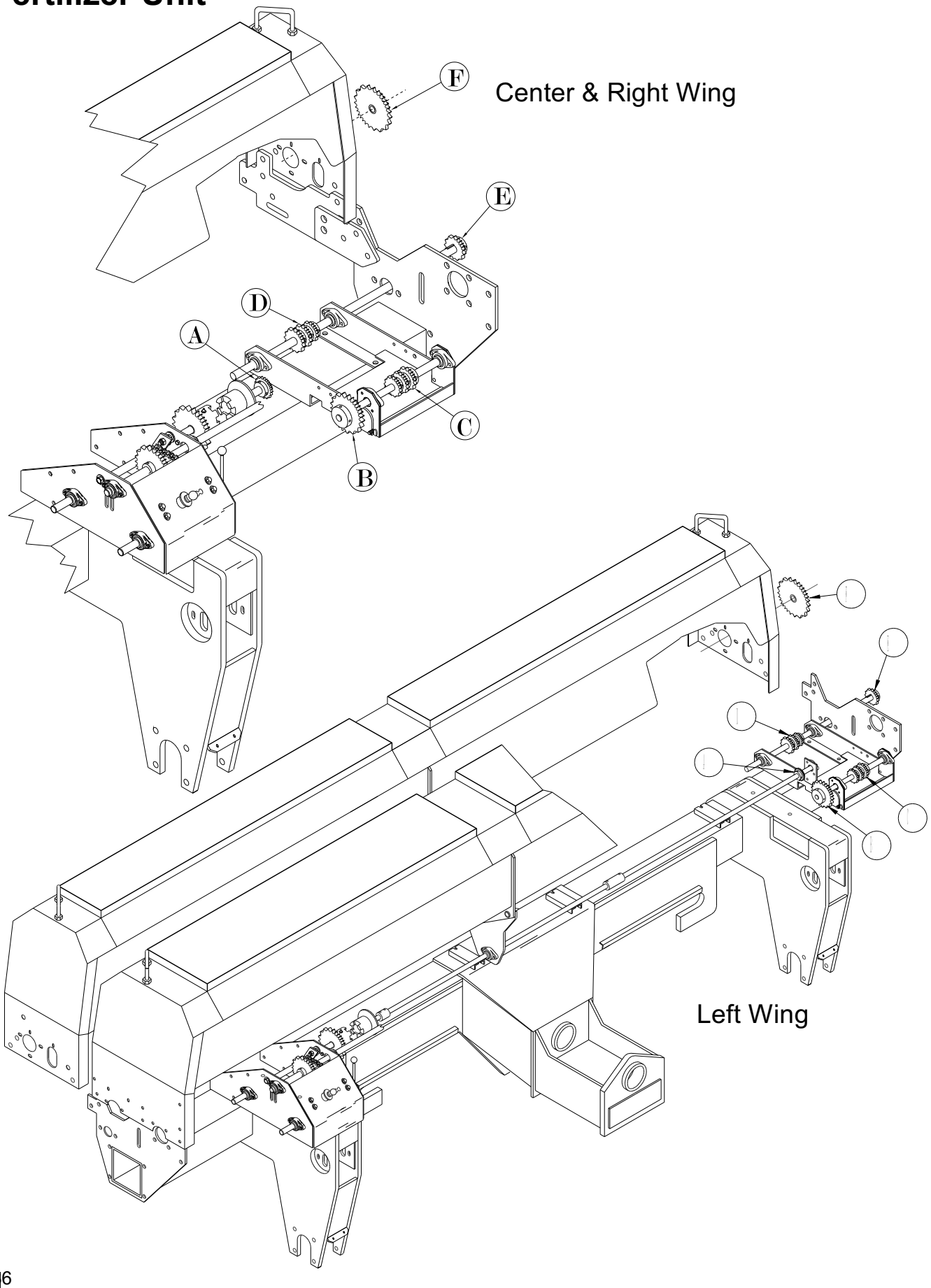

Fertilizer Box Capacity 21¼ bushels per box

REFER TO NOTE BELOW TO DETERMINE RATE, THEN REFER TO THIS CHART.

Fertilizer delivery rate per revolution determined from sample of material you will apply of:

Sprockets						.55 oz of fertilizer per rotor revolution will yield application rate in lb/acre of:	.6 oz of fertilizer per rotor revolution will yield application rate in lb/acre of:	.65 oz of fertilizer per rotor revolution will yield application rate in lb/acre of:	.7 oz of fertilizer per rotor revolution will yield application rate in lb/acre of:	.75 oz of fertilizer per rotor revolution will yield application rate in lb/acre of:
A	B	C	D	E	F					
14	40	14	21	18	44	28	30	33	35	38
14	40	15	20	18	44	31	34	37	40	43
14	40	16	19	18	44	35	38	41	45	48
14	40	14	21	18	30	41	44	48	52	55
14	40	15	20	18	30	46	50	54	58	62
14	40	16	19	18	30	51	56	61	65	70
14	40	14	21	25	30	56	62	67	72	77
14	40	15	20	25	30	64	69	75	81	87
14	40	16	19	25	30	71	78	84	91	97
14	40	14	21	30	25	81	89	96	104	111
14	40	15	20	30	25	92	100	108	116	125
14	40	16	19	30	25	103	112	121	131	140
14	40	14	21	30	18	113	123	134	144	154
14	40	15	20	30	18	127	139	150	162	173
14	40	16	19	30	18	143	156	169	182	195
14	40	14	21	44	18	166	181	196	211	226
14	40	15	20	44	18	186	203	220	237	254
14	40	16	19	44	18	209	228	247	266	285

NOTE: The different types of fertilizer you apply will all have different delivery rates. Samples need to be caught to determine your particular material's delivery rate per rotor revolution in ounces per revolution. A minimum of 10 turns is recommended because of the small amounts involved.

Example: If 10 revolutions from one cup delivers 6.5 ounces, divide 6.5 by 10 to find ounces per revolution.

$6.5 \div 10 = .65$

Refer to chart using the column for .65 ounces.

4740 Drive - Left Wing Fertilizer Unit

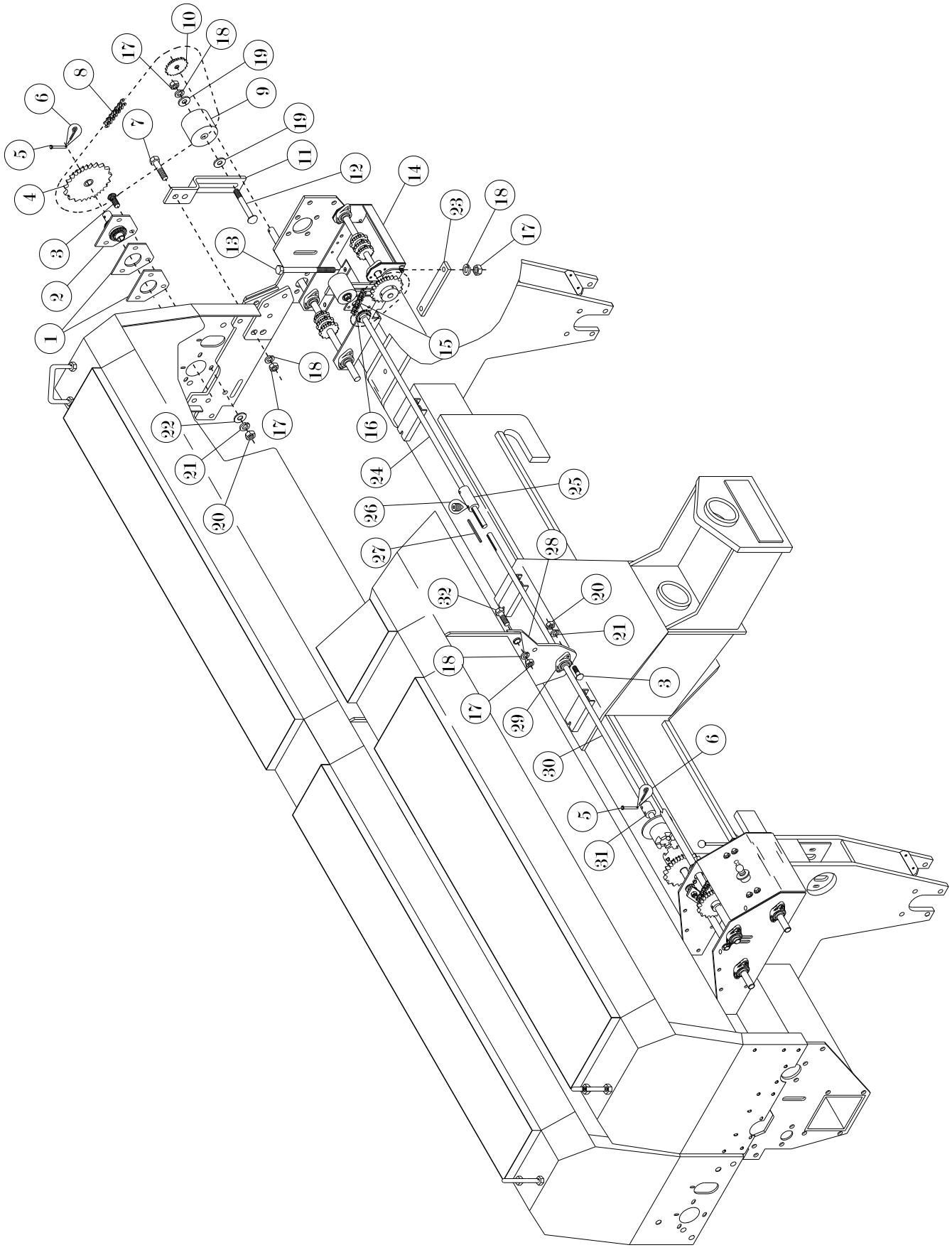

4740 Drive - Left Wing Fertilizer Unit

Item	Part No.	Description
1	220467	Spacer Plate
2	866442	Drive End Bearing Bracket Assy
3	01261700	Carriage Bolt 5/16" x 1½"
4	954362	Sprocket 2050 44T 1" Bore
5	335349	Clevis Pin 1/4" x 1 5/8"
6	337071	Cotter Pin 3/32" x ½"
7	331926	HHCS ½" x 2"
8	431841	Chain 2050 x 37 Links
	430983	Connector Link 2050
	431270	Offset Link 2050
9	571273	Nylon Idler
10	954131	Sprocket 2050 18T 1" Bore
11	220624	Idler Plate
12	335323	Carriage Bolt ½" x 3"
13	335018	HHCS ½" x 8½"
14	867762	Fertilizer Gear Box Left Wing
15	433029	Chain Assy #40 x 57 Pitches Complete
16	433037	Sprocket #40 14T ½" Pitch w/Cone Point Set Screw
17	330134	Hex Nut ½"
18	330142	Lock Washer ½"
19	330159	Flat Washer ½"
20	330811	Hex Nut 5/16"
21	330845	Lock Washer 5/16"
22	330852	Flat Washer 5/16"
23	220830	Mount Plate
24	312116	Fertilizer Drive Shaft
25	150342	Connector Spool
26	01139500	Set Screw 3/8" Star Cup
27	605683	Key 1/4" x 4½"
28	220848	Fertilizer Center Bearing Plate
29	03001500	Bearing 1" Flange Mount
30	310011	Fertilizer Drive Shaft
31	150334	Adapter Sleeve
32	335240	HHCS ½" x 1 3/4"

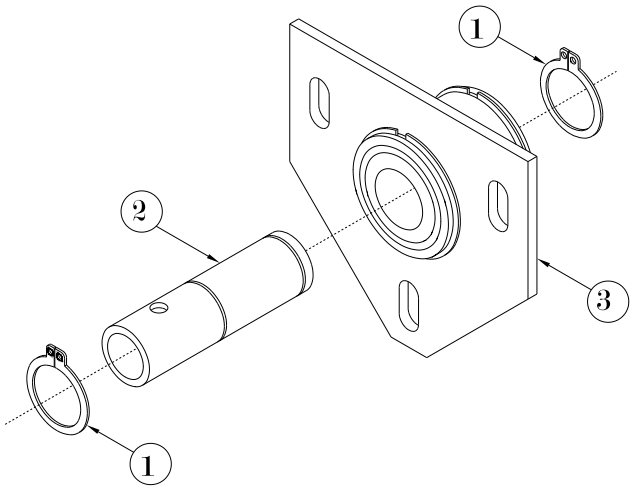

Drive End Bracket & Bearing #866442

Item	Part No.	Description
1	605766	External Snap Ring
2	310235	Seed Shaft Drive Adaptor
3	866434	Drive End Bracket/Brg Assy

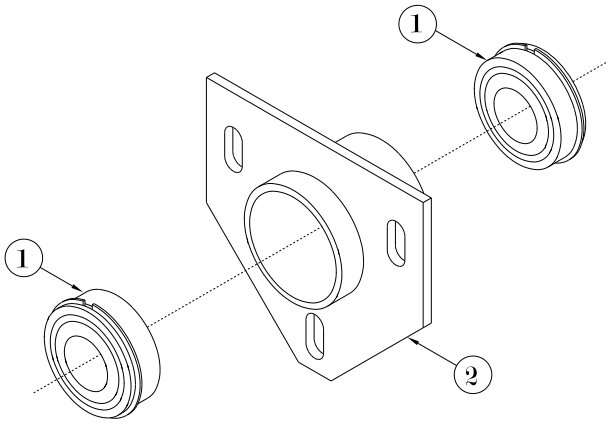

Drive End Bracket #866434

Item	Part No.	Description
1	03003100	Bearing 1" w/Spring
2	959130	Drive End Bracket

4740 Drive - Center & Right Wing Fertilizer Unit

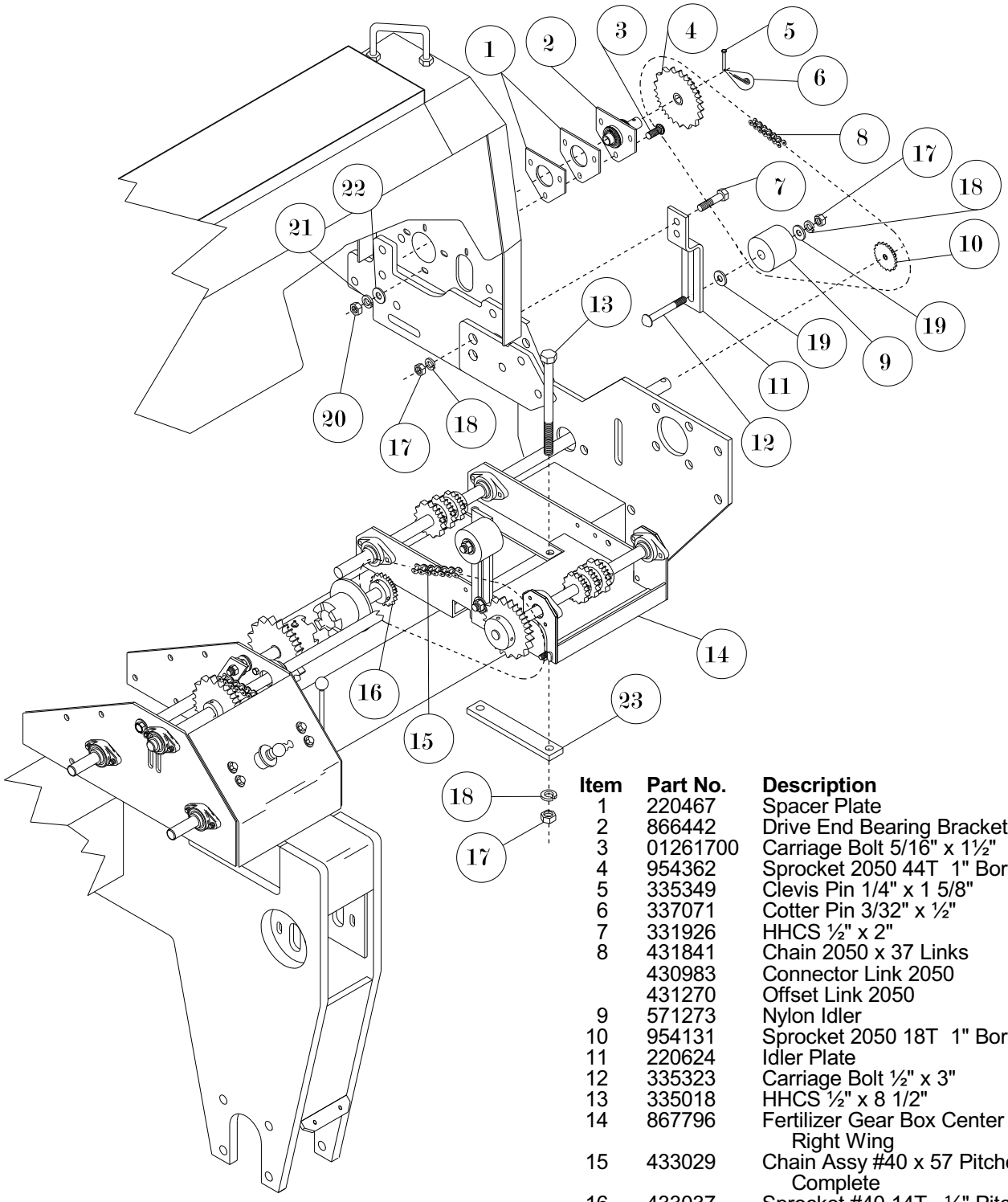

Item	Part No.	Description
1	220467	Spacer Plate
2	866442	Drive End Bearing Bracket Assy
3	01261700	Carriage Bolt 5/16" x 1½"
4	954362	Sprocket 2050 44T 1" Bore
5	335349	Clevis Pin 1/4" x 1 5/8"
6	337071	Cotter Pin 3/32" x ½"
7	331926	HHCS ½" x 2"
8	431841	Chain 2050 x 37 Links
	430983	Connector Link 2050
	431270	Offset Link 2050
9	571273	Nylon Idler
10	954131	Sprocket 2050 18T 1" Bore
11	220624	Idler Plate
12	335323	Carriage Bolt ½" x 3"
13	335018	HHCS ½" x 8 1/2"
14	867796	Fertilizer Gear Box Center & Right Wing
15	433029	Chain Assy #40 x 57 Pitches Complete
16	433037	Sprocket #40 14T ½" Pitch w/Cone Point Set Screw
17	330134	Hex Nut ½"
18	330142	Lock Washer ½"
19	330159	Flat Washer ½"
20	330811	Hex Nut 5/16"
21	330845	Lock Washer 5/16"
22	330852	Flat Washer 5/16"
23	220830	Mount Plate

4740 Gearbox - Left Wing
Fertilizer Unit

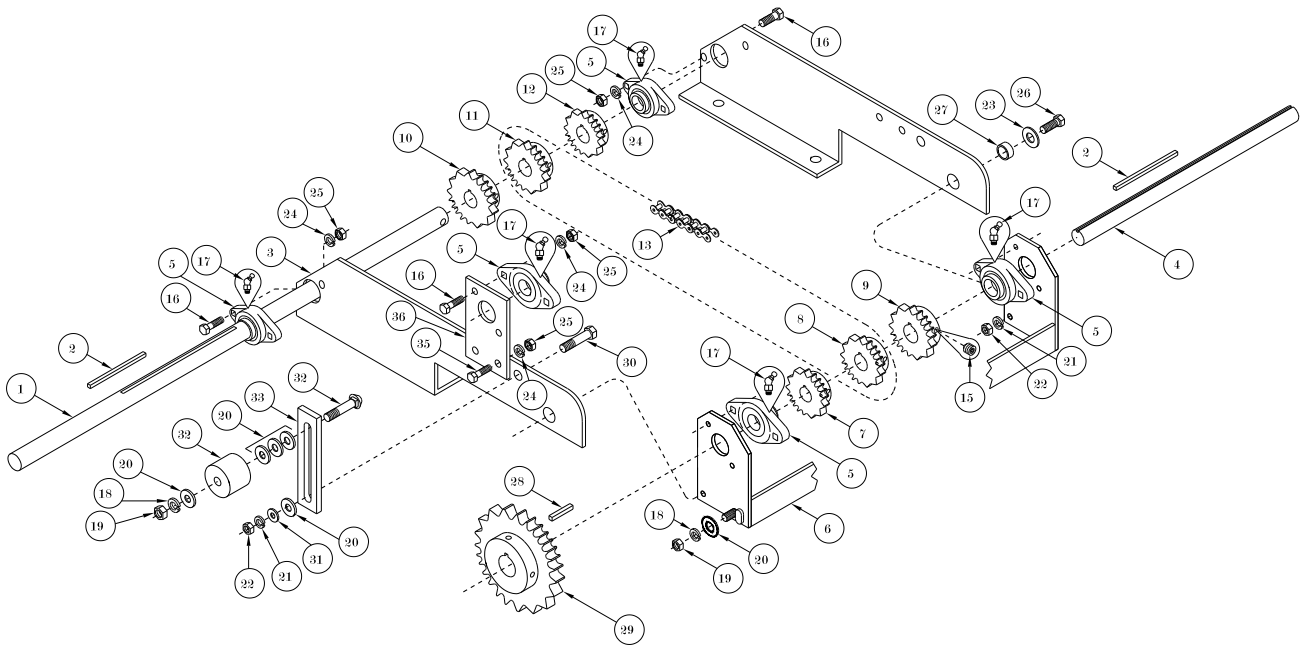

Item	Qty	Part No.	Description
		875120	Gearbox Assembly Left Wing
1	1	311985	Box End Drive Shaft
2	2	220616	Key 1/4" x 3½"
3	1	969451	Fertilizer Gearbox 4740
4	1	311993	Fertilizer Drive Shaft
5	5	03001500	Bearing 1" Flange Mount
6	1	969469	Gearbox Front Bracket
7	1	432948	Sprocket #40 14 Tooth RC Non-Stock ½ Pitch
8	1	432955	Sprocket #40 15 Tooth RC Non-Stock ½ Pitch
9	1	05237300	Sprocket #40 16 Tooth RC Non-Stock ½ Pitch
10	1	432997	Sprocket #40 21 Tooth RC Non-Stock ½ Pitch
11	1	432989	Sprocket #40 20 Tooth RC Non-Stock ½ Pitch
12	1	432971	Sprocket #40 19 Tooth RC Non-Stock ½ Pitch
13	1	434027	Chain Assy #40 x 95P Complete
15	9	01100700	Set Screw 5/16" x 5/16"
16	8	01011600	HHCS 5/16" x 1 1/4"
17	5	01162700	Zerk 1/4-28 45°
18	7	330142	Lock Washer ½"
19	3	330134	Hex Nut ½"
20	7	330159	Flat Washer ½"
21	3	330043	Lock Washer 3/8"
22	3	330035	Hex Nut 3/8"
23	2	330852	Flat Washer 5/16"
24	10	330845	Lock Washer 5/16"
25	10	330811	Hex Nut 5/16"
26	2	01158500	HHCS 3/8" x 1 1/4"
27	2	149393	Spacer
28	1	10490100	Key 1/4" x 1 1/4"
29	1	433003	Sprocket #40 40 Tooth RC Non-Stock ½ Pitch
30	1	335703	HHCS 3/8" x 1½"
31	1	330894	Flat Washer 3/8"
32	1	571273	Nylon Idler
33	1	935783	Idler Plate
34	1	333310	Carriage Bolt ½" x 3½"
35	2	01010800	HHCS 5/16" x 1"
36	1	230896	Bearing Plate

4740 Gearbox - Center & Right Wing Fertilizer Unit

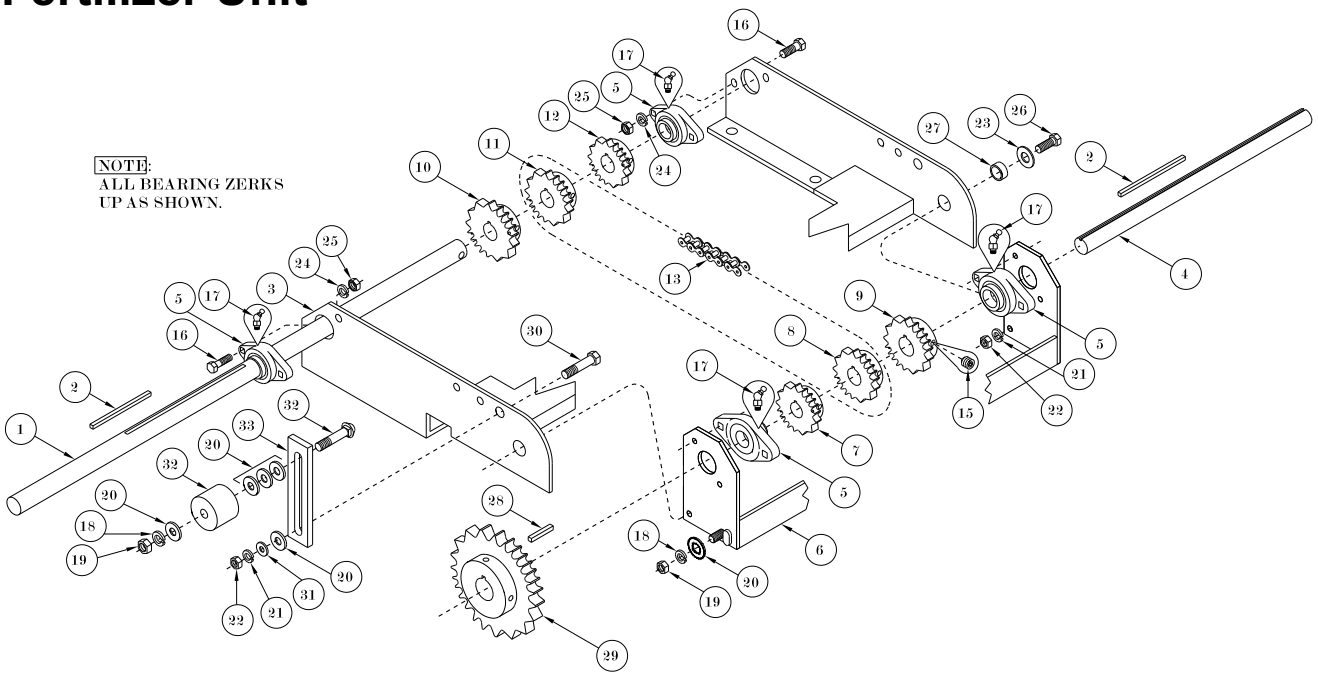

Item	Qty	Part No.	Description
		875112	Gearbox Assembly Center & Right Wing
1	1	311985	Box End Drive Shaft
2	2	220616	Key 1/4" x 3½"
3	1	969451	Fertilizer Gearbox 4740
4	1	311993	Fertilizer Drive Shaft
5	4	03001500	Bearing 1" Flange Mount
6	1	969469	Gearbox Front Bracket
7	1	432948	Sprocket #40 14 Tooth RC Non-Stock ½ Pitch
8	1	432955	Sprocket #40 15 Tooth RC Non-Stock ½ Pitch
9	1	05237300	Sprocket #40 16 Tooth RC Non-Stock ½ Pitch
10	1	432997	Sprocket #40 21 Tooth RC Non-Stock ½ Pitch
11	1	432989	Sprocket #40 20 Tooth RC Non-Stock ½ Pitch
12	1	432971	Sprocket #40 19 Tooth RC Non-Stock ½ Pitch
13	1	434027	Chain Assy #40 x 95P Complete
15	9	01100700	Set Screw 5/16" x 5/16"
16	8	01011600	HHCS 5/16" x 1 1/4"
17	4	01162700	Zerk 1/4-28 45°
18	7	330142	Lock Washer ½"
19	3	330134	Hex Nut ½"
20	3	330159	Flat Washer ½"
21	3	330043	Lock Washer 3/8"
22	3	330035	Hex Nut 3/8"
23	2	330852	Flat Washer 5/16"
24	8	330845	Lock Washer 5/16"
25	8	330811	Hex Nut 5/16"
26	2	01158500	HHCS 3/8" x 1 1/4"
27	2	149393	Spacer
28	1	10490100	Key 1/4" x 1 1/4"
29	1	433003	Sprocket #40 40 Tooth RC Non-Stock ½ Pitch
30	1	335703	HHCS 3/8" x 1½"
31	1	330894	Flat Washer 3/8"
32	1	571273	Nylon Idler
33	1	935783	Idler Plate
34	1	333310	Carriage Bolt ½" x 3½"

Fertilizer Gear Box
Chain Tightening Instructions

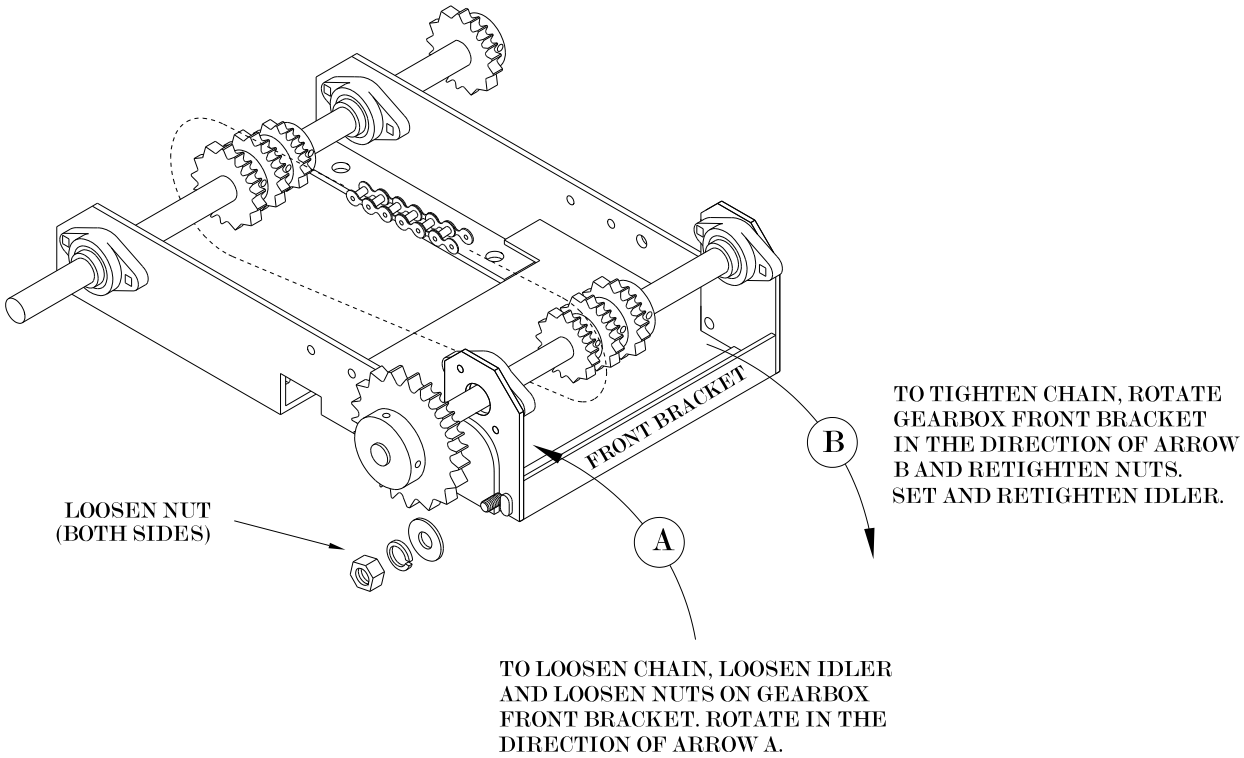

4740 Box Assembly
Fertilizer Unit

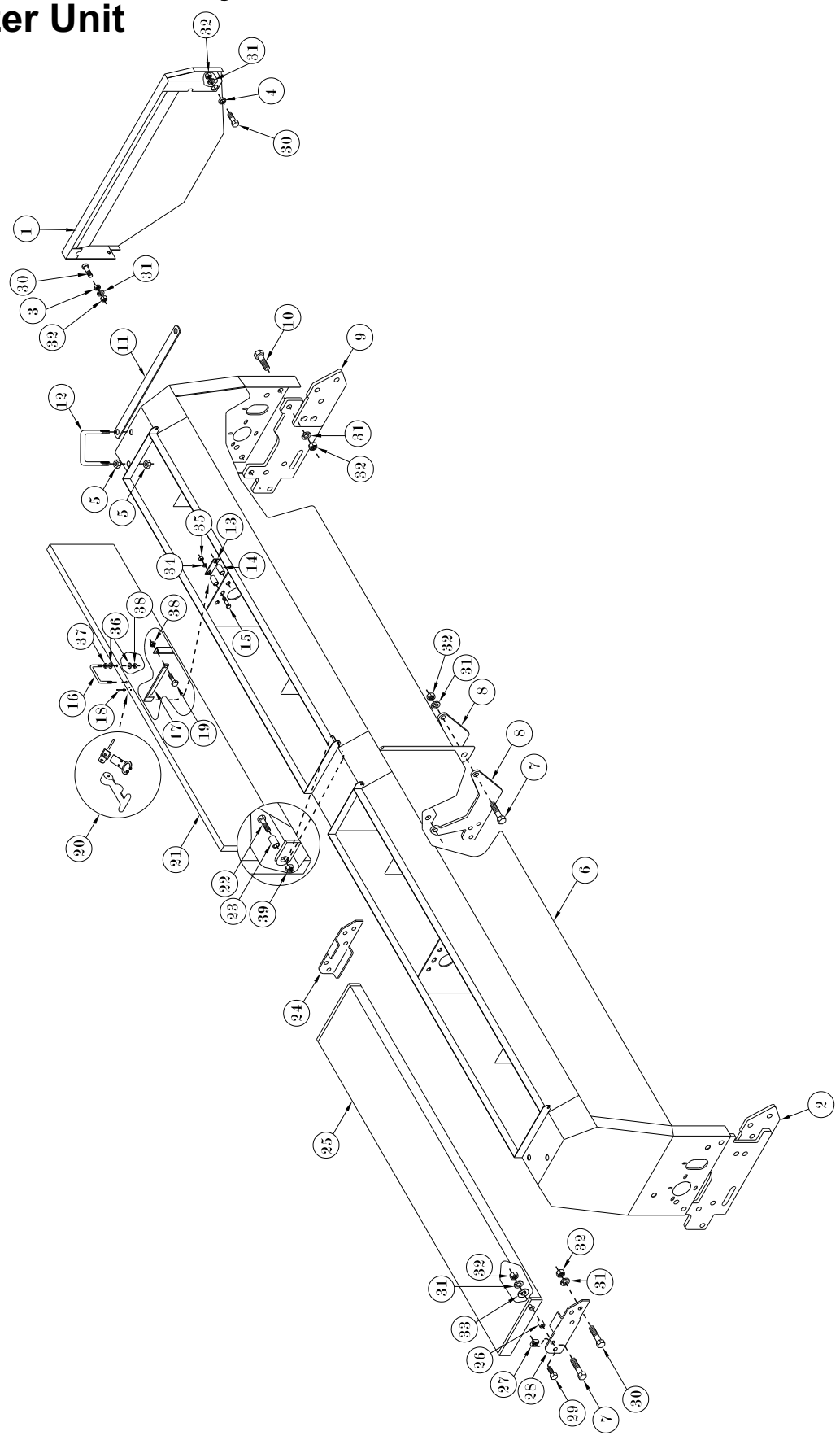

4740 Box Assembly
Fertilizer Unit

Item	Part No.	Description
1	960815	Chain Shield
2	958850	Box Mount Bracket Right
3	332262	Hex Jam Nut ½"
4	150599	Chain Guard Bushing
5	330571	Hex Nut 5/8"
6	968693	Welded Fertilizer Box
7	335240	HHCS ½" x 1 3/4"
8	218313	Box Center Brace Plate
9	958835	Box Mount Bracket Left
10	01147800	HHCS ½" x 1½"
11	259713	Box Strap
12	335737	U-bolt 5/8" x 4" x 3"
13	190942	Lid Latch
14	145144	Lid Latch Spool
15	335133	HHCS 1/4" x 1 3/4"
16	308122	Box Lid Handle
17	221317	Lid Latch Bracket
18	601989	Pop Rivet 3/16" x 1/4"
19	01011600	HHCS 5/16" x 1 1/4"
20	570341	Lid Latch w/Hook
21	968719	Box Lid
22	335703	HHCS 3/8" x 1½"
23	149385	Lid Bushing
24	216226	Box End Walkboard Bracket Left
25	962589	Walkboard
26	150086	Walkboard Bushing
27	332197	Square Nut ½"
28	216192	Box End Walkboard Brkt Right
29	01029800	HHCS ½" x 1"
30	01180900	HHCS ½" x 1 1/4"
31	330142	Lock Washer ½"
32	330134	Hex Nut ½"
33	330159	Flat Washer ½"
34	330050	Lock Washer 1/4"
35	332205	Hex Nut 1/4"
36	330852	Flat Washer 5/16"
37	330811	Hex Nut 5/16"
38	331611	Hex Nylock Nut 5/16"
39	330837	Hex Nylock Nut 3/8"

4740 Box Bottom Assembly
Fertilizer Unit

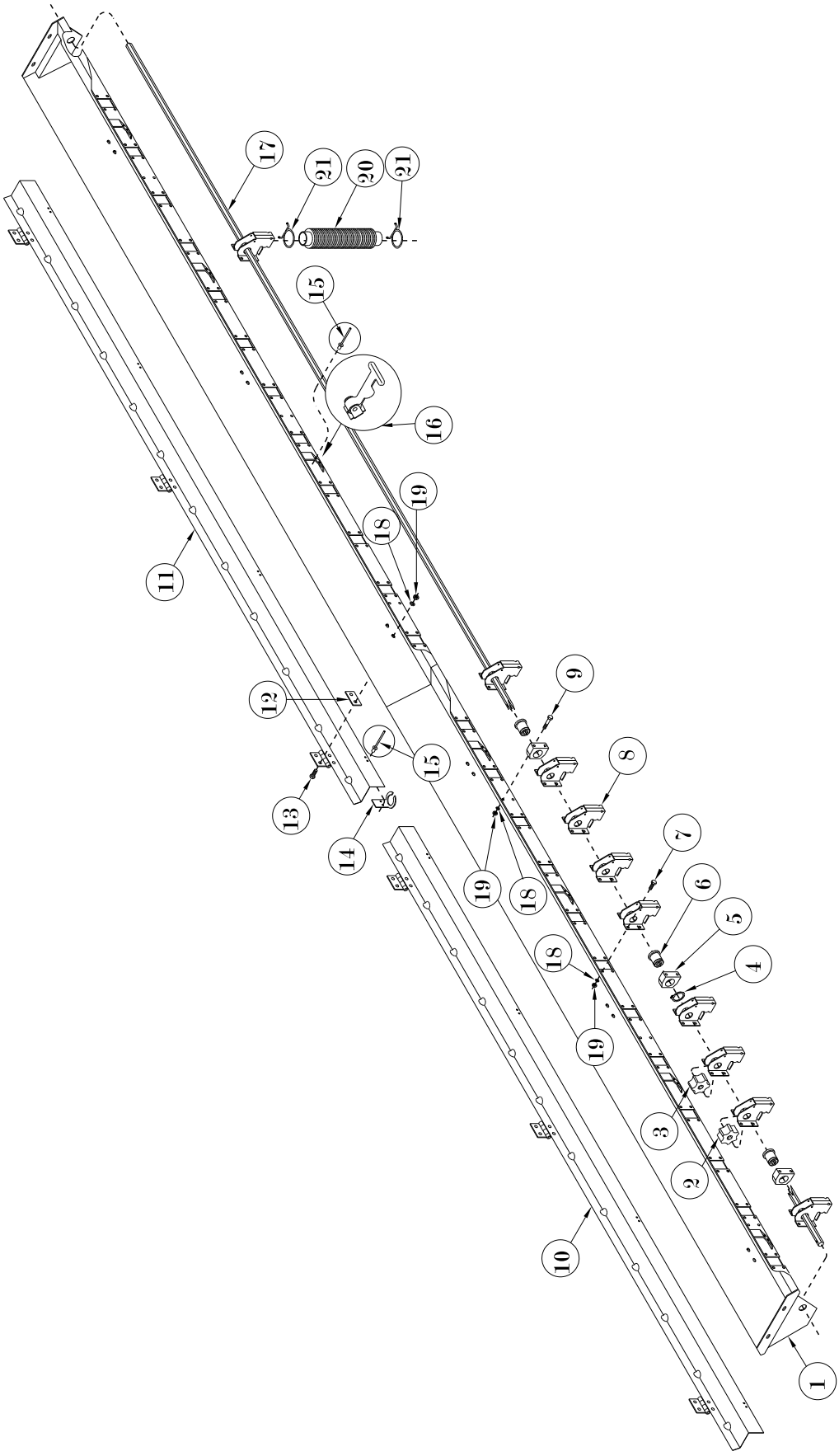

4740 Box Bottom Assembly
Fertilizer Unit

Item	Part No.	Description
		Box Bottom Assemblies
	874677	10" Left
	874685	10" Right
1	968677	4740 x 10" Box Bottom
2	571240	Nylon Fertilizer Rotor
3	571257	Nylon Fertilizer Rotor 30° Hex Rotation
4	605766	External Snap Ring
5	571232	Fertilizer Bearing
6	310508	Fertilizer Hex Bearing Shaft
7	01245000	HHCS 1/4" x ½" SS
8	960625	Fertilizer Cup Weldment
9	337741	HHCS 1/4" x 2" SS
10	960906	Fertilizer Door Left
11	960914	Fertilizer Door Right
12	259523	Door Hinge Spacer Plate
13	02226900	HHCS 1/4" x 3/4" SS
14	570341	Lid Latch (Includes hook #16)
15	601989	Pop Rivet 3/16" x 1/4" Aluminum
16	570341	Lid Latch Hook (Includes latch #14)
17	310532	Hex Shaft 5/8" x 171"
18	337550	Lock Washer 1/4" SS
19	01507300	Hex Nut 1/4" SS
20	571091	Feed Tube 59 Convolutions
21	603027	Hose Clamp 1 5/8" x 11/64"

4740 All Plant Feed Tubes
Fertilizer Unit

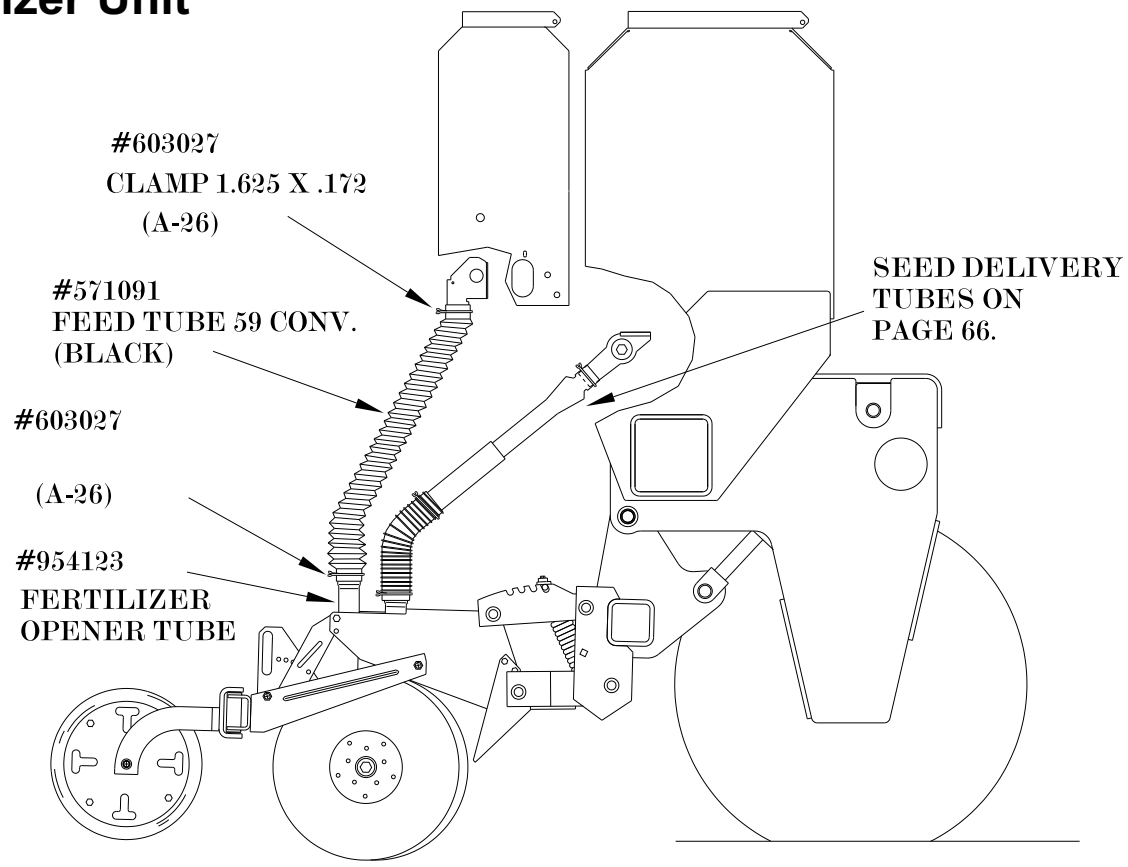

4740 Min-Till Feed Tubes
Fertilizer Unit

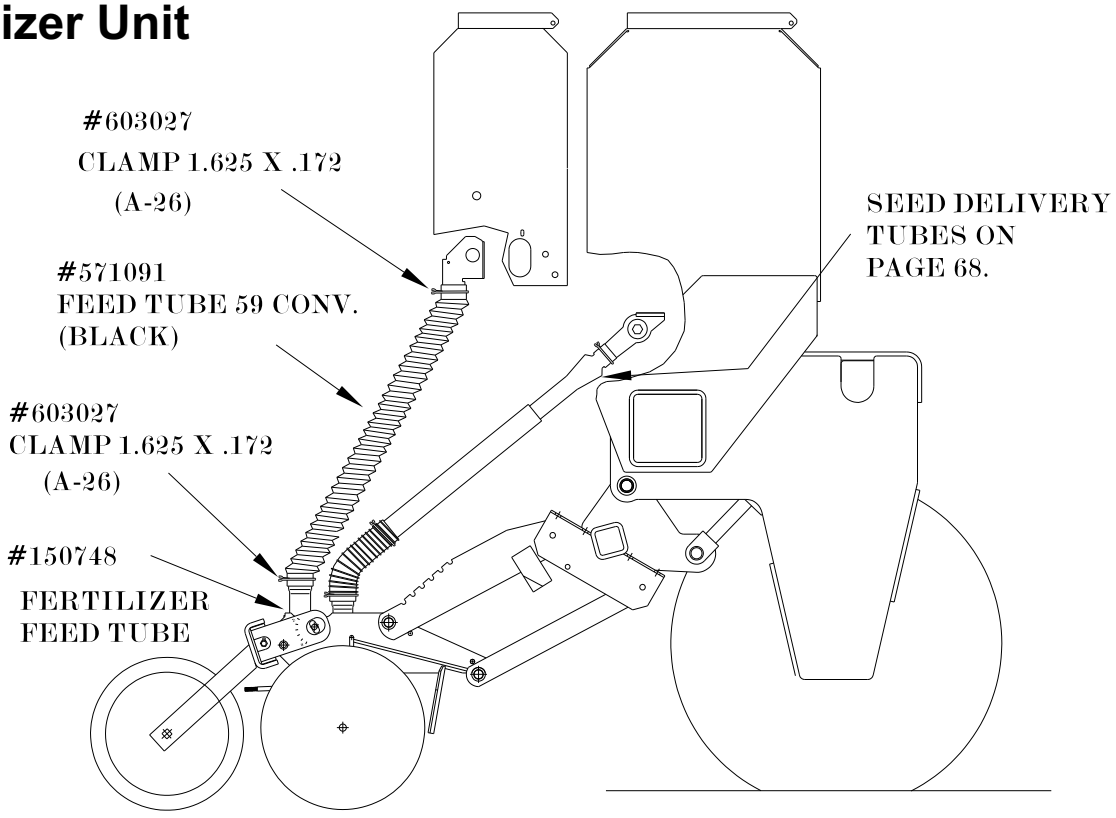

Troubleshooting

Problem	Solution
Reached limits on depth quadrant	Reposition top bolt in depth quadrant to remaining hole (up or down). Level drill front to back.
Unable to penetrate hard ground	Increase down pressure. Add weight to frame.
Press wheels ineffective	Add weight to frame. Level drill front to back with adjustable clevis.
Hairpinning residue	Residue tough due to wet soil or damp air. Wait for better conditions. Reduce speed (recommended speed 4-6 m.p.h.)
Opener pitching excessive dirt from seed zone.	Soil too damp. Wait for better conditions. Reduce speed.
Trash plugging ahead of openers	Remove nosepieces to avoid catching long pieces of residue.
Openers pushing and plugging in minimum tillage or conventional	Loose residue in loose soil may require less down pressure. Reduce pressure. Remove spring. Till at shallower depth. Firm soil with packer or roller.
Unable to hold depth in worked soil	Till at shallower depth. Use wider press wheels for more surface contact.

CrustBuster
SPEED KING INC.

P.O.Box 1438 Dodge City, Kansas 67801 (620) 227-7106